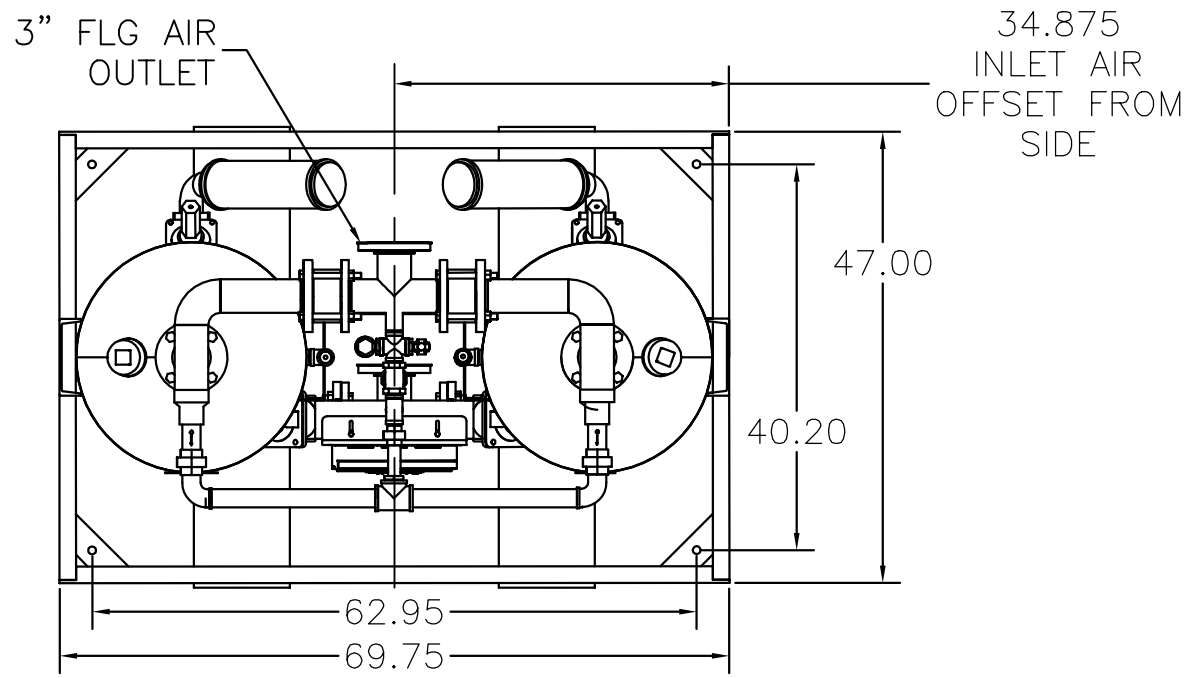

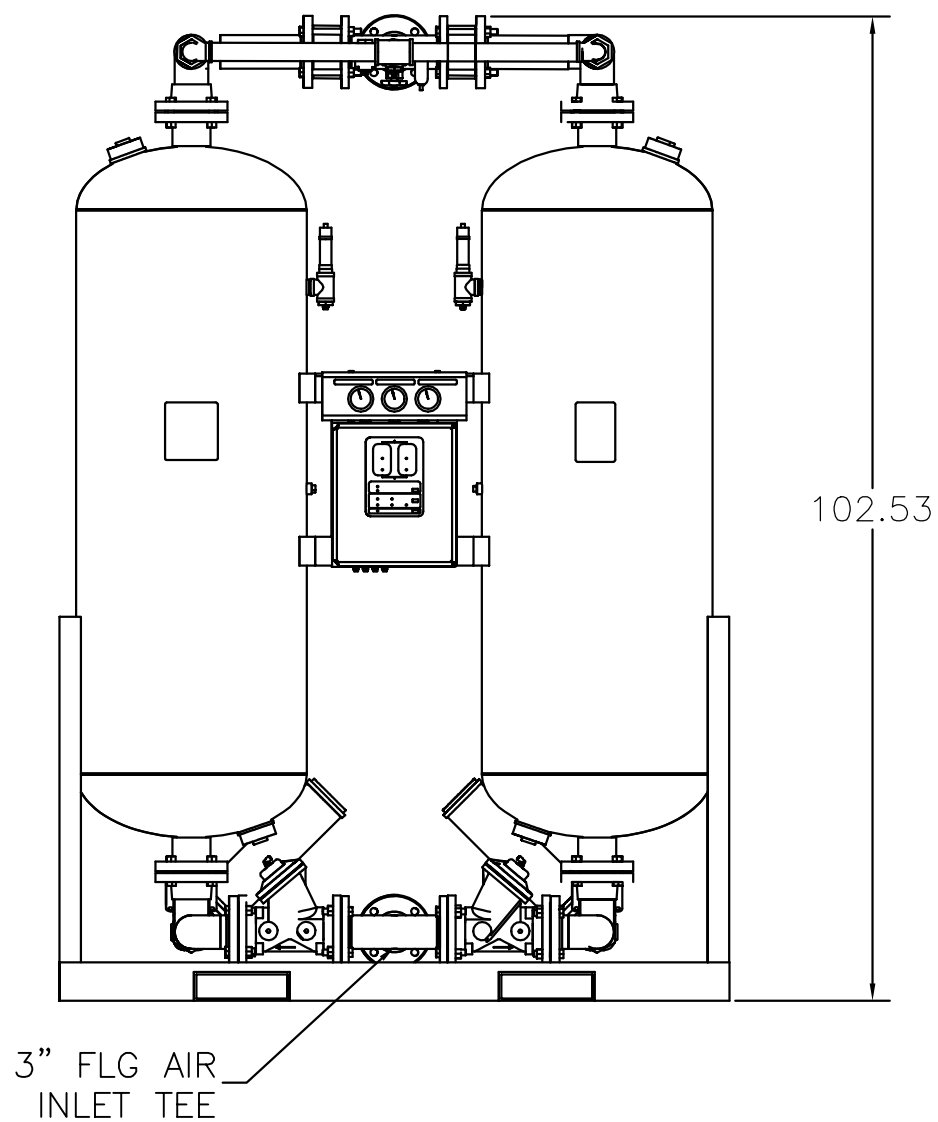

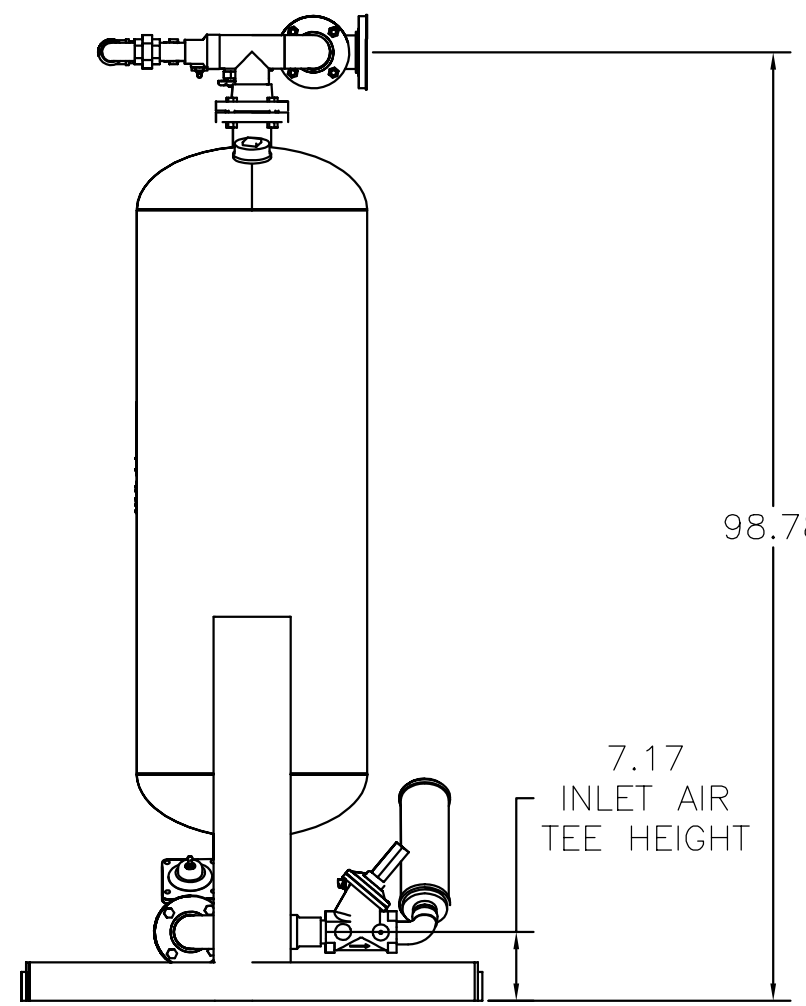

REV	ECN	DATE	DESCRIPTION	APPROVED

DO NOT SCALE DRAWING

Arrow Pneumatics

HEATLESS REGEN DRYER
1100 SCFM
DIMENSIONED LAYOUT

DRAWN BY GAUGHAN
DATE 3.29.01
SIZE D
SCALE NTS
PART NO. RH218A1A1A1A1A1