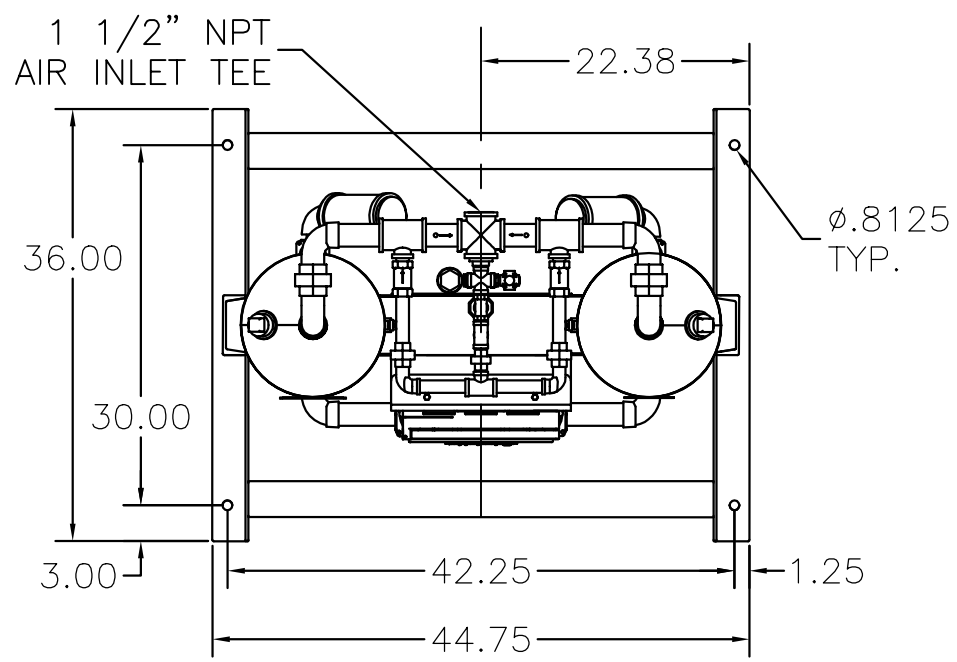

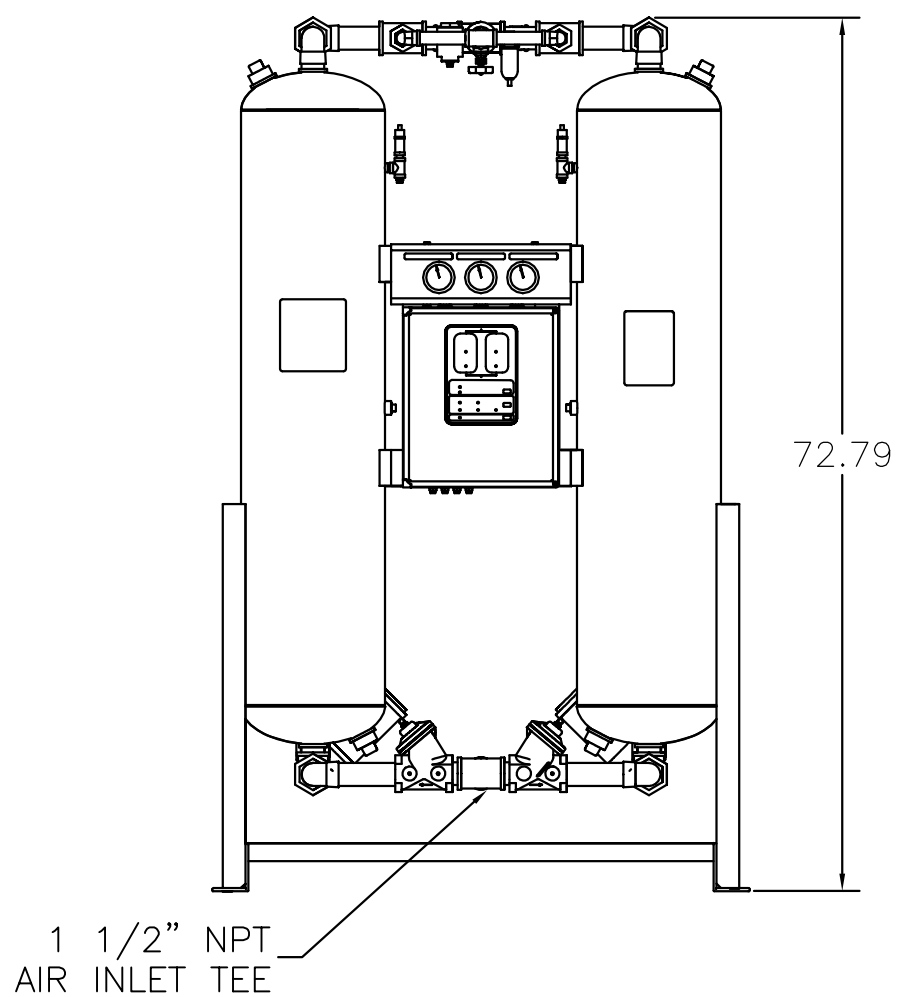

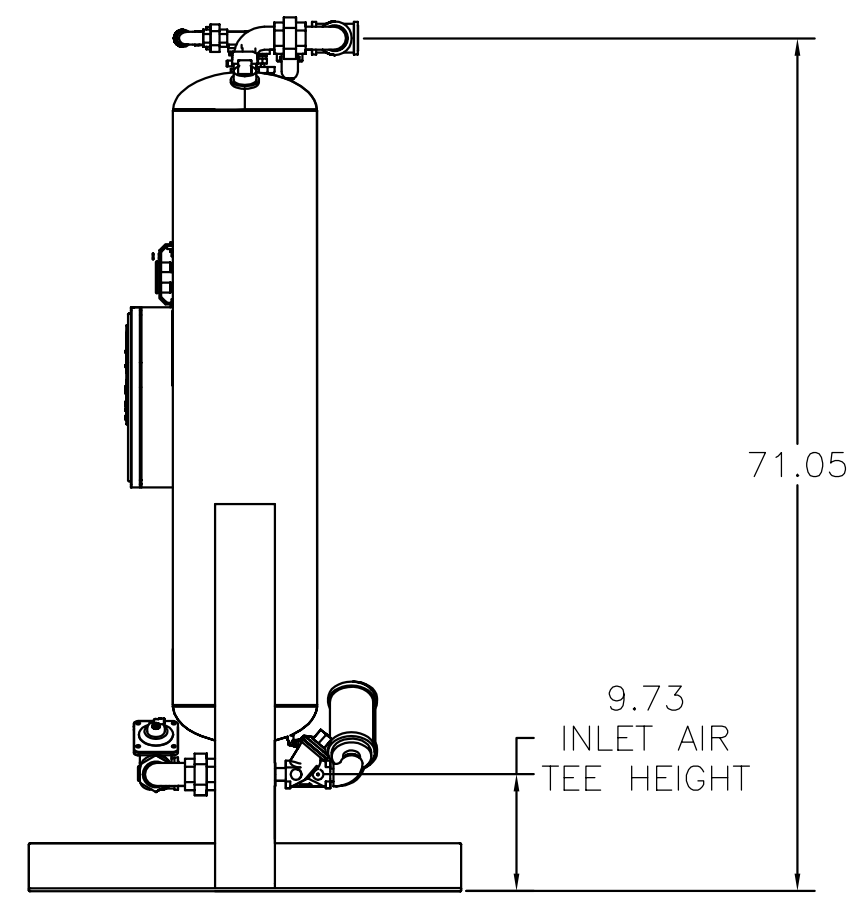

REV	ECN	DATE	DESCRIPTION	APPROVED

REMARKS

DO NOT SCALE DRAWING

FINISH

TREATMENT

MATERIAL

Arrow Pneumatics

DESCRIPTION: HEATLESS REGEN DRYER 250 SCFM DIMENSIONED LAYOUT

DRAWN BY: GAUGHAN

DATE: 1.29.01

SIZE: D

SCALE: NTS

REV:

PART NO.: RH210A1A1A1A1A1