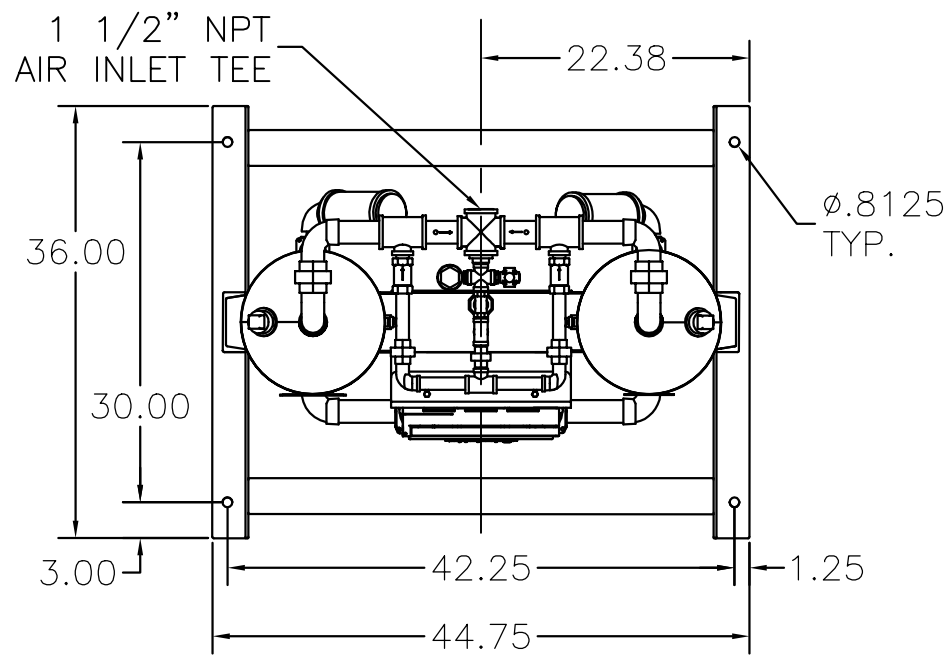

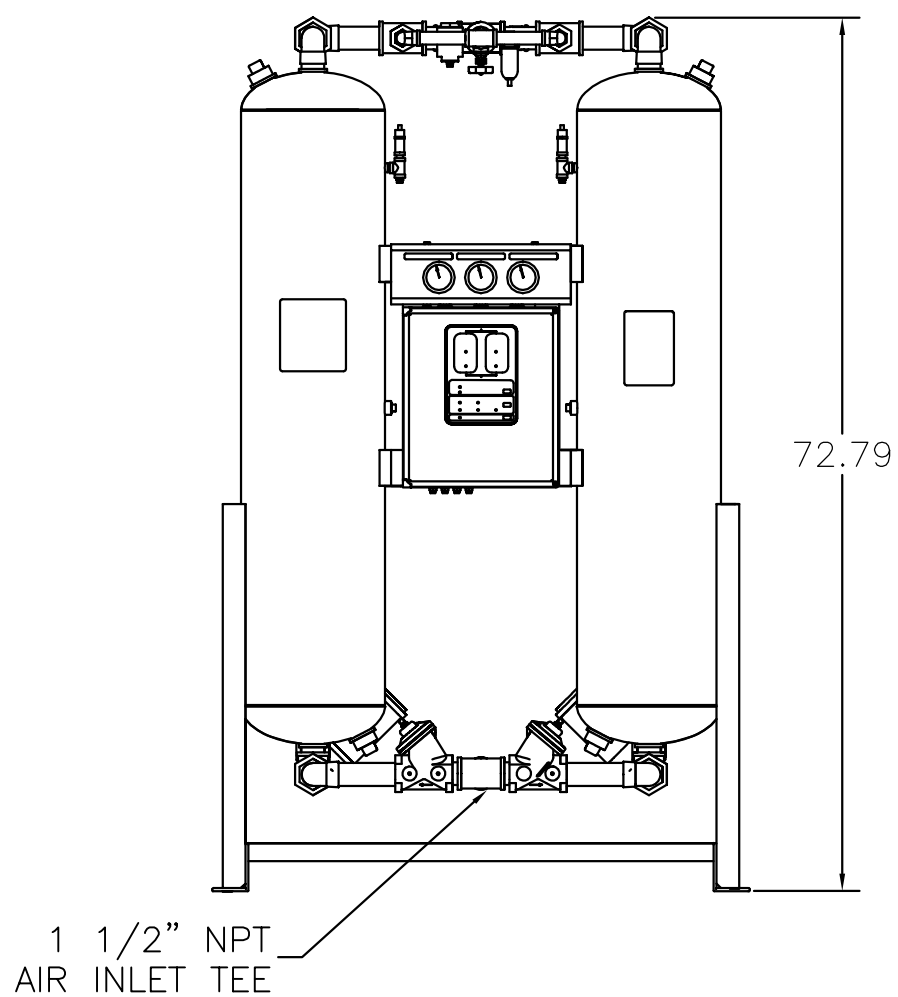

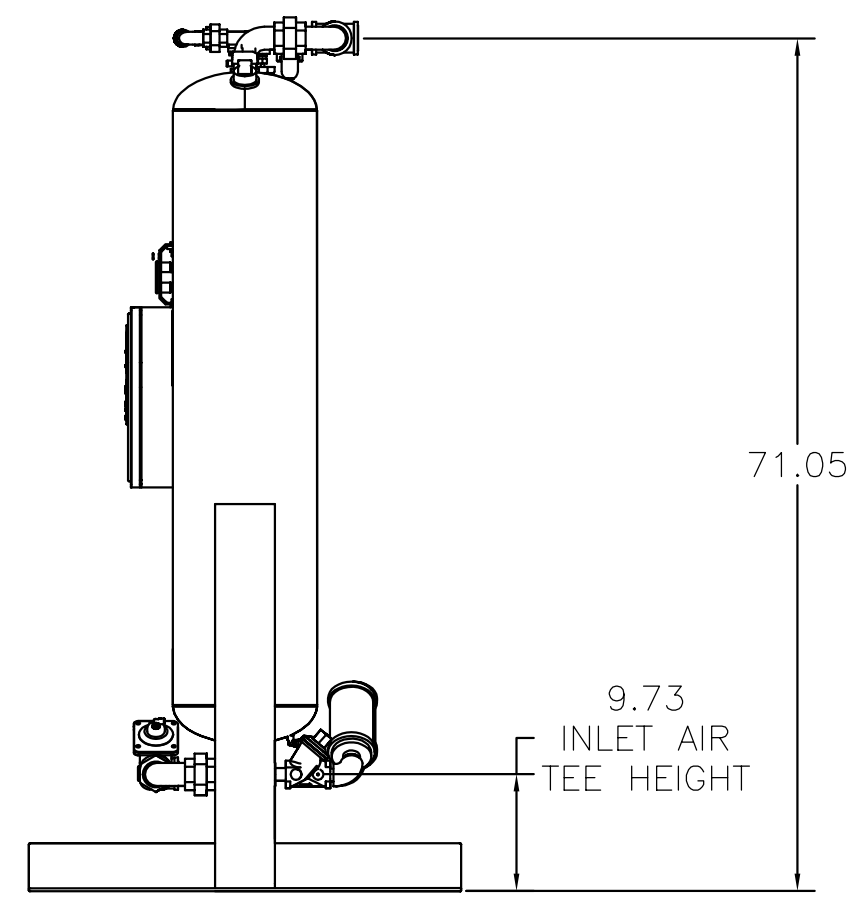

REV	ECN	DATE	DESCRIPTION	APPROVED
			REMARKS	

DO NOT SCALE DRAWING

Arrow Pneumatics

DESCRIPTION: HEATLESS REGEN DRYER 200 SCFM DIMENSIONED LAYOUT

DRAWN BY: GAUGHAN

DATE: 1.29.01

SIZE: D

SCALE: NTS

REV:

FILE NO.: RH209A1A1A1A1A1