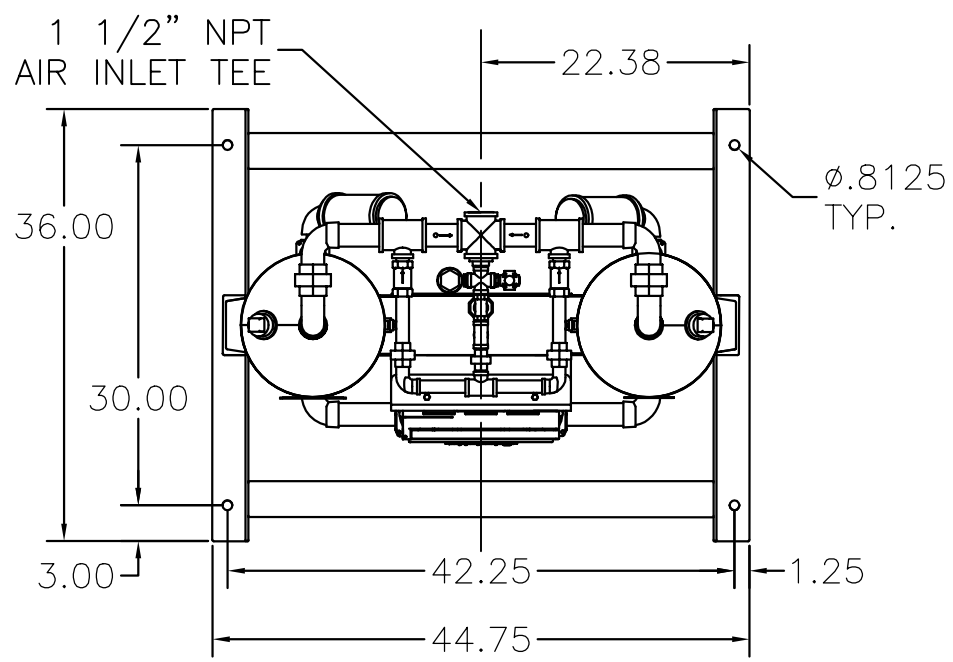

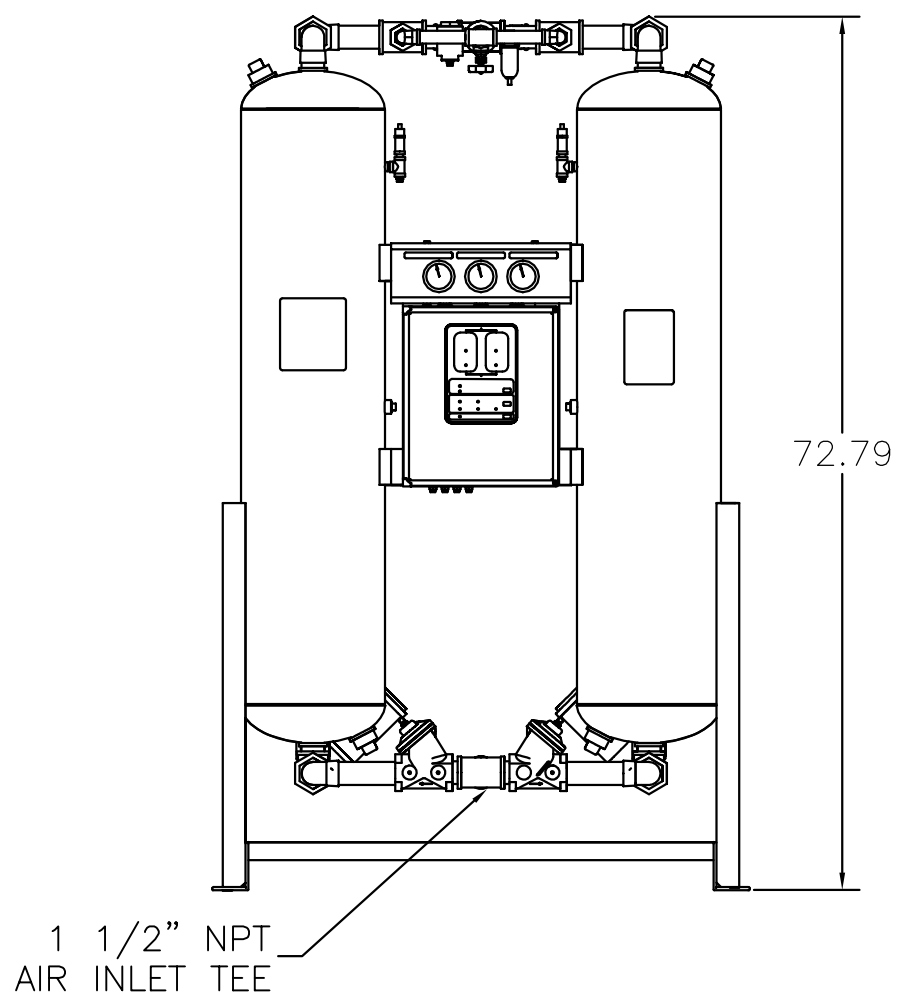

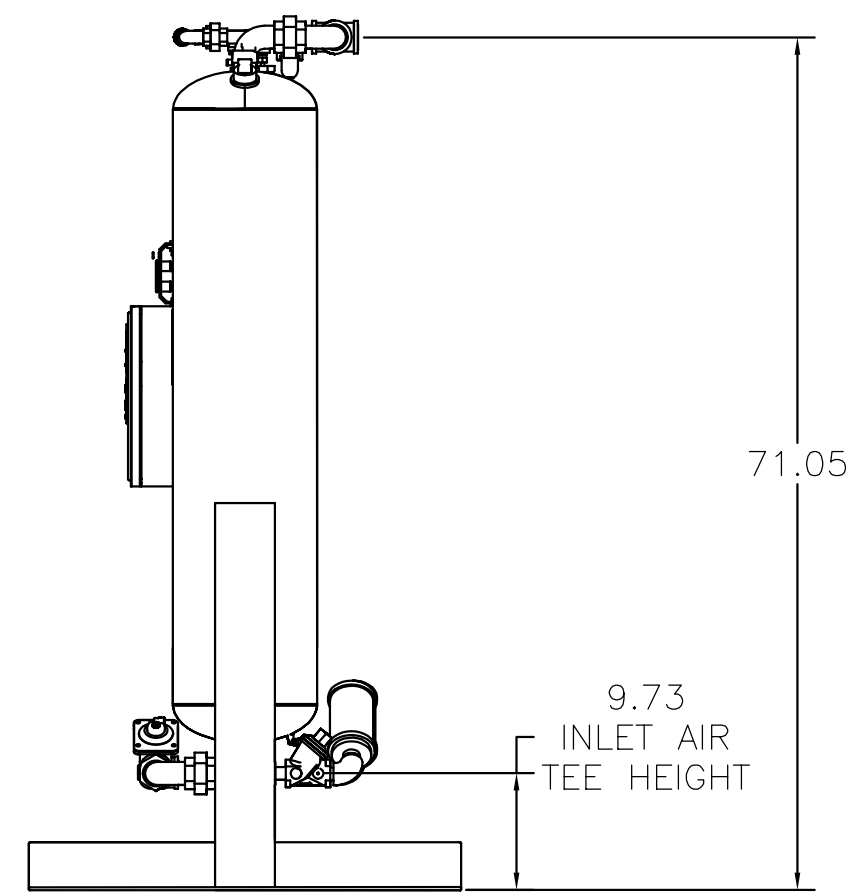

REV	ECN	DATE	DESCRIPTION	APPROVED
			REMARKS	

DO NOT SCALE DRAWING

Arrow Pneumatics

HEATLESS REGEN DRYER
150 SCFM
DIMENSIONED LAYOUT

DRAWN BY GAUGHAN | DATE 1.29.01 | SIZE D | SCALE NTS | REV

RH208A1A1A1A1A1