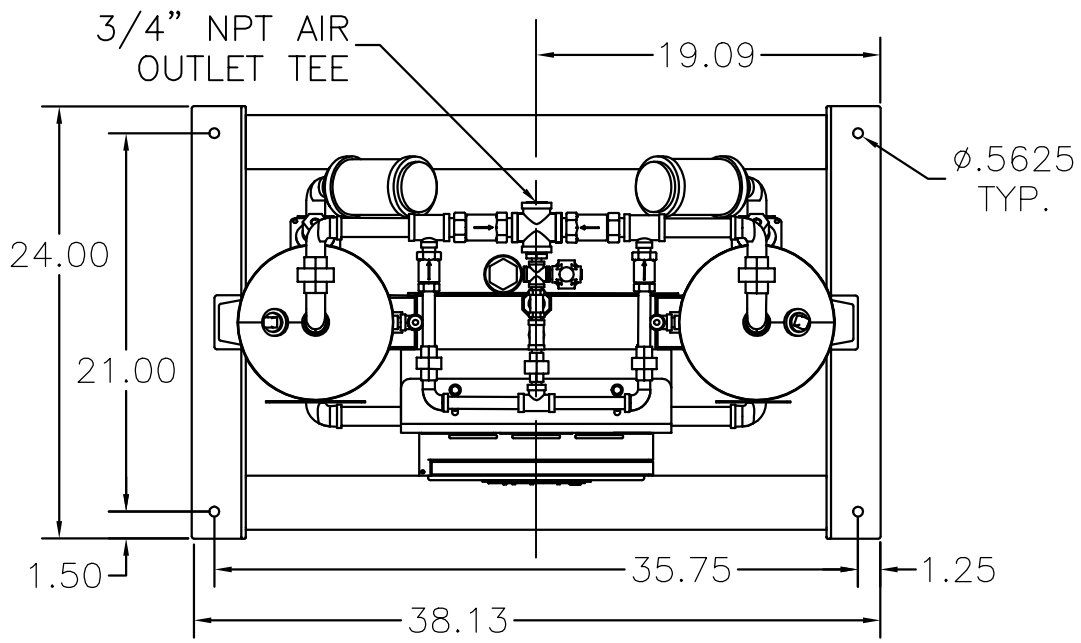

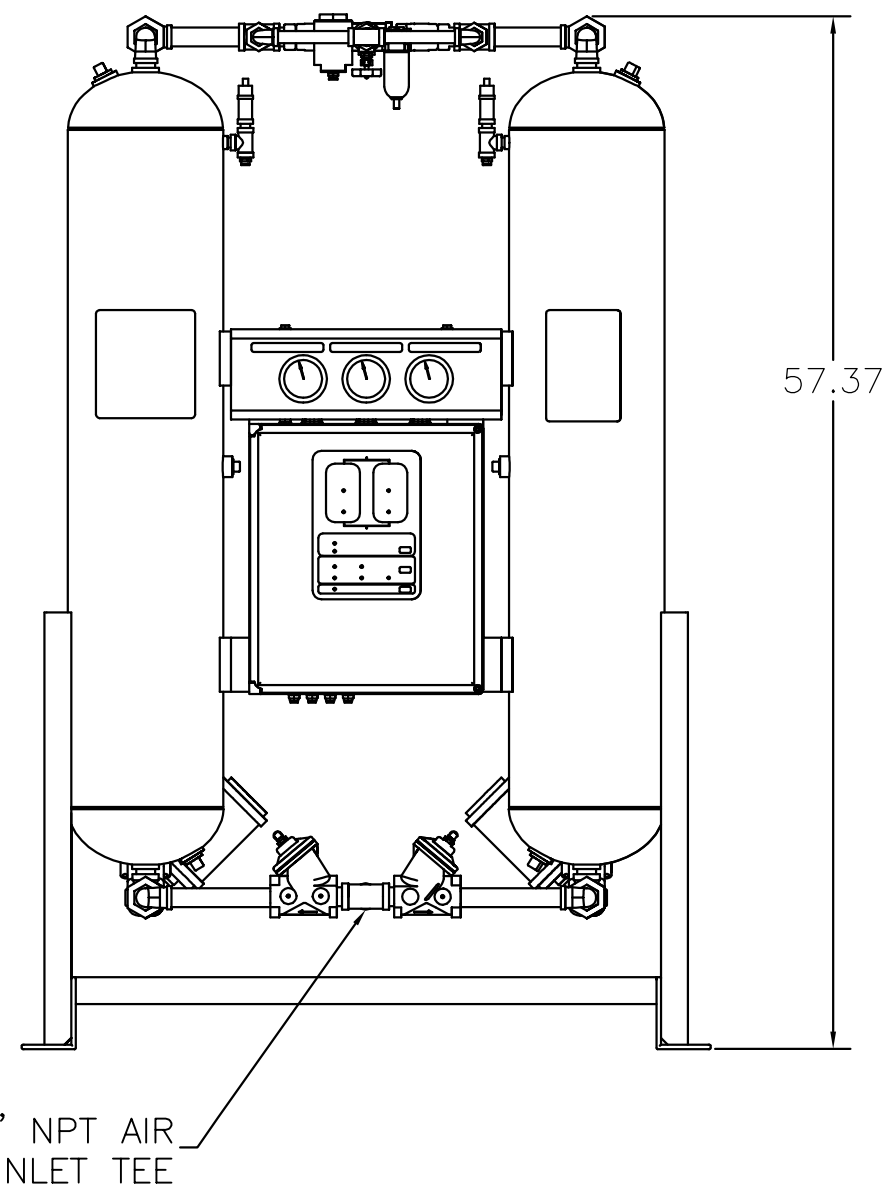

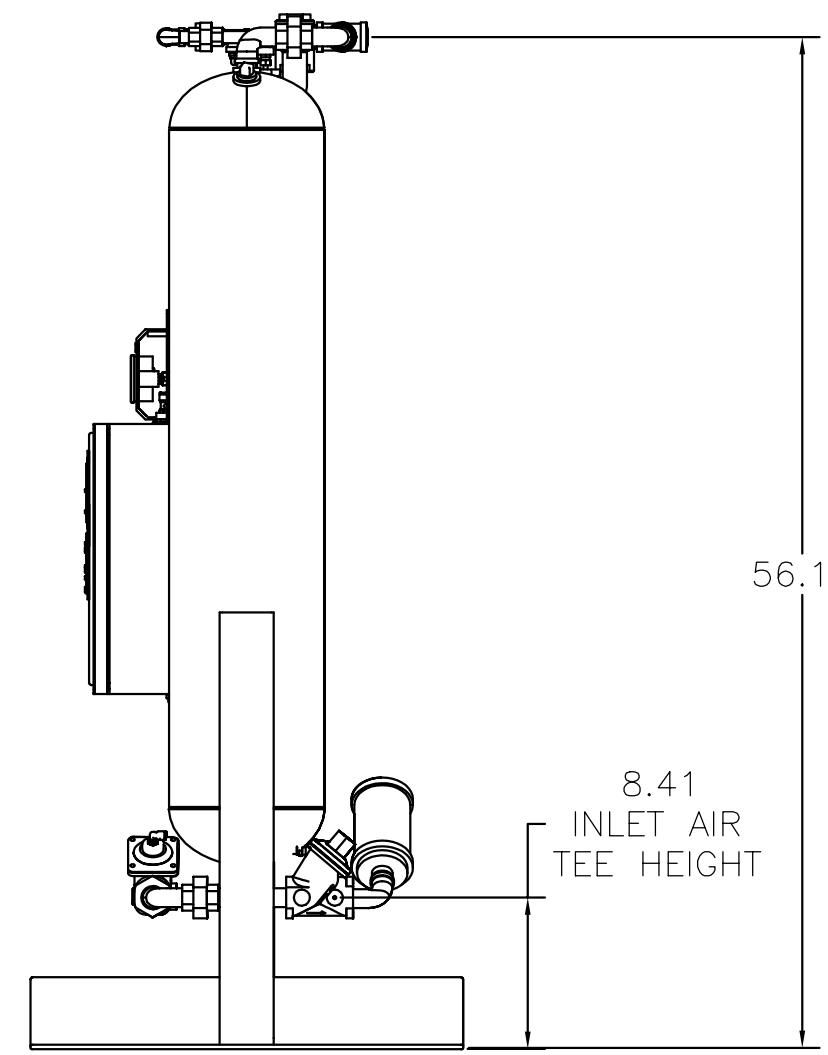

REV	ECN	DATE	DESCRIPTION	APPROVED	DO NOT SCALE DRAWING		

Arrow Pneumatics

HEATLESS REGEN DRYER
75 SCFM
DIMENSIONED LAYOUT

DRAWN BY GAUGHAN | DATE 1.29.01 | D | SCALE NTS | REV

PART NO. RH205A1A1A1A1A1