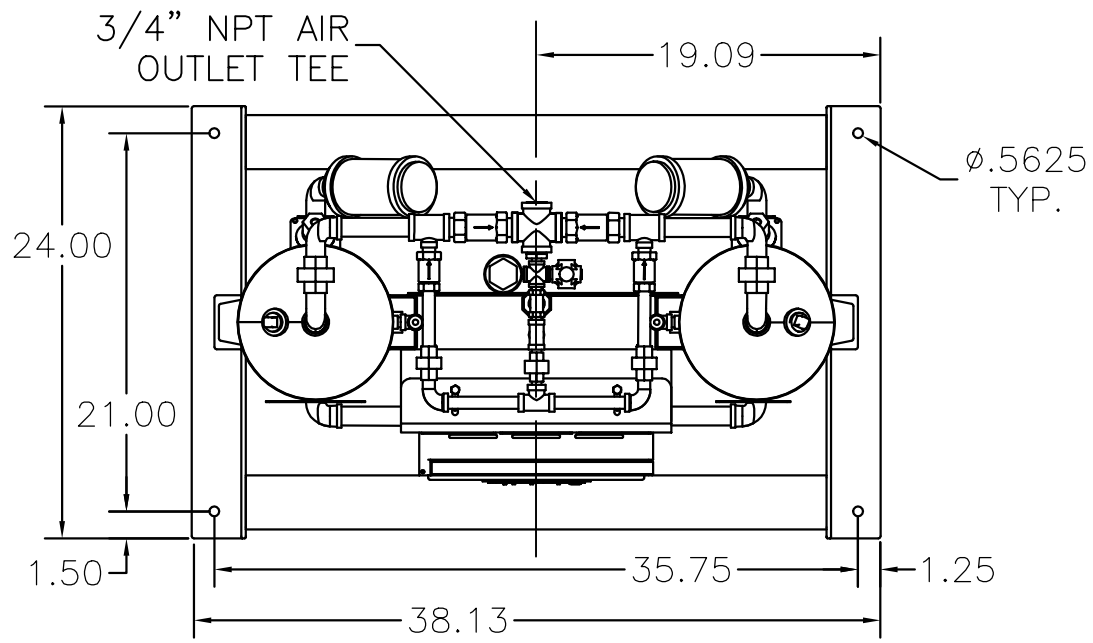

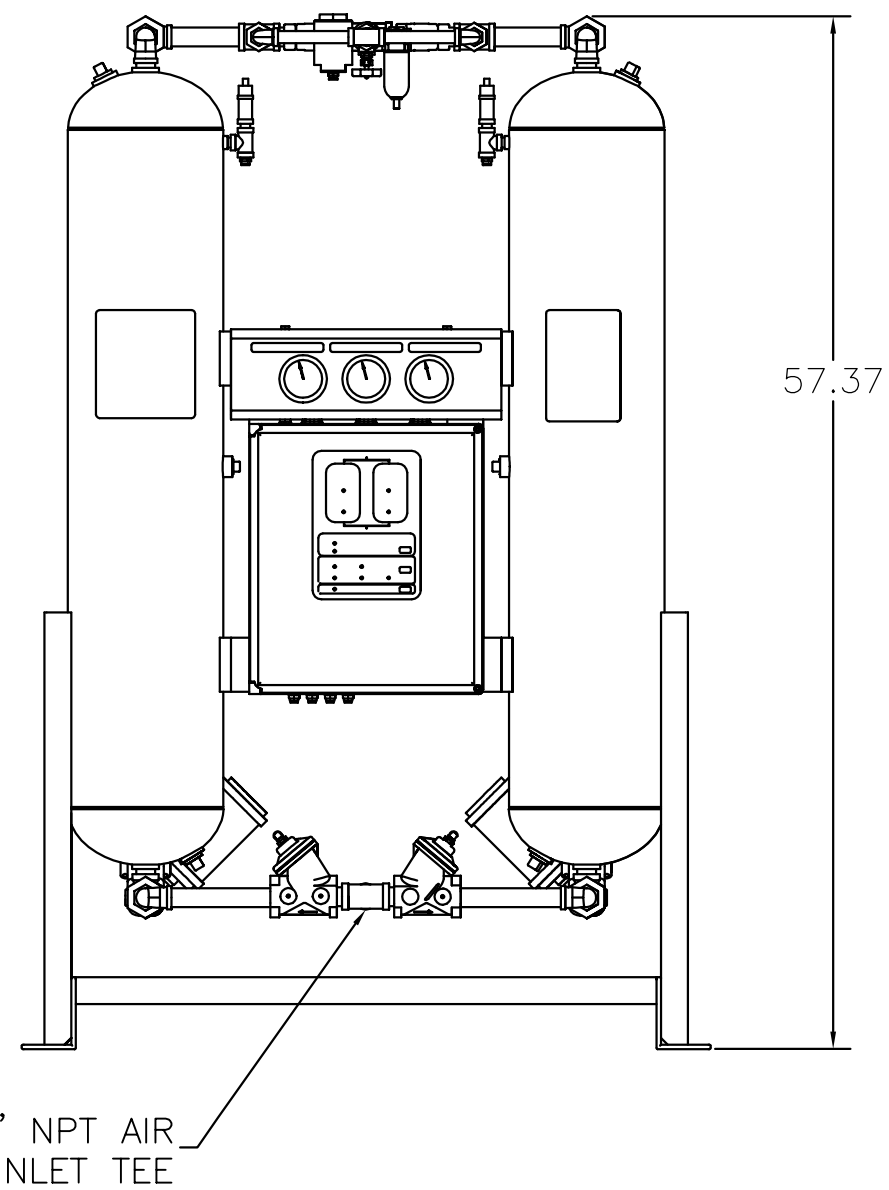

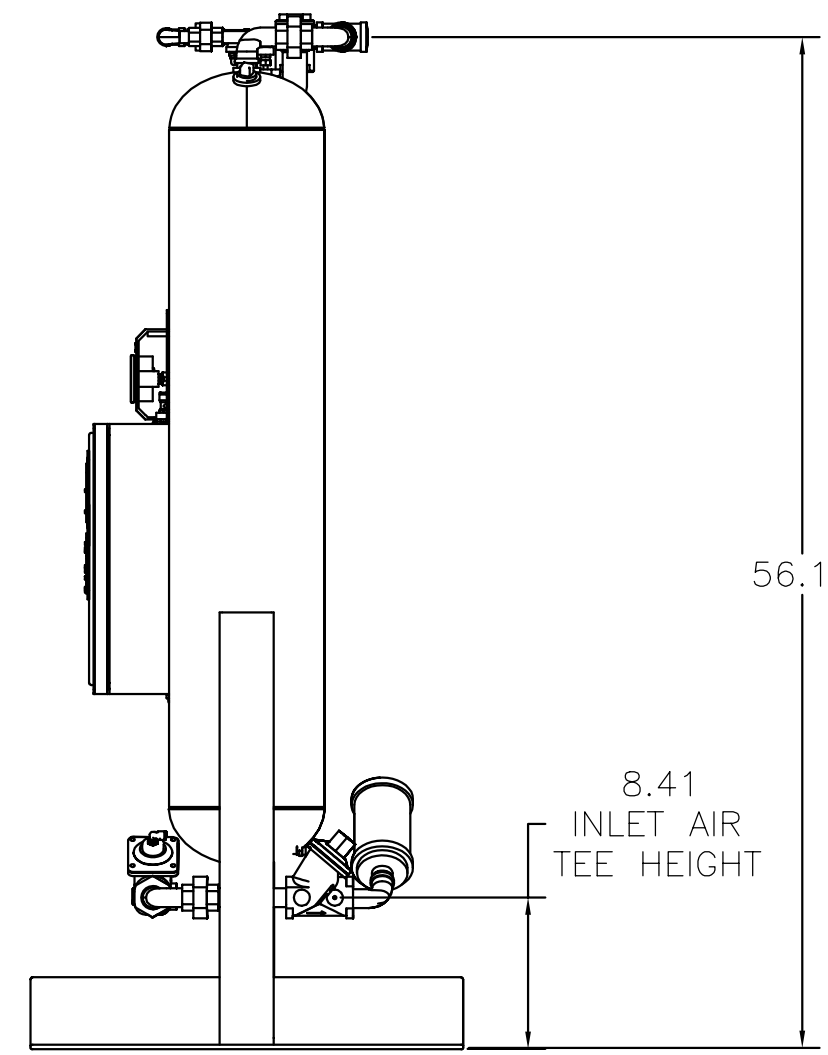

REV	ECN	DATE	DESCRIPTION	APPROVED	DO NOT SCALE DRAWING		

Arrow Pneumatics

HEATLESS REGEN DRYER
50 SCFM
DIMENSIONED LAYOUT

DRAWN BY GAUGHAN | DATE 1.29.01 | D | SCALE NTS | REV

PART NO. RH204A1A1A1A1A1