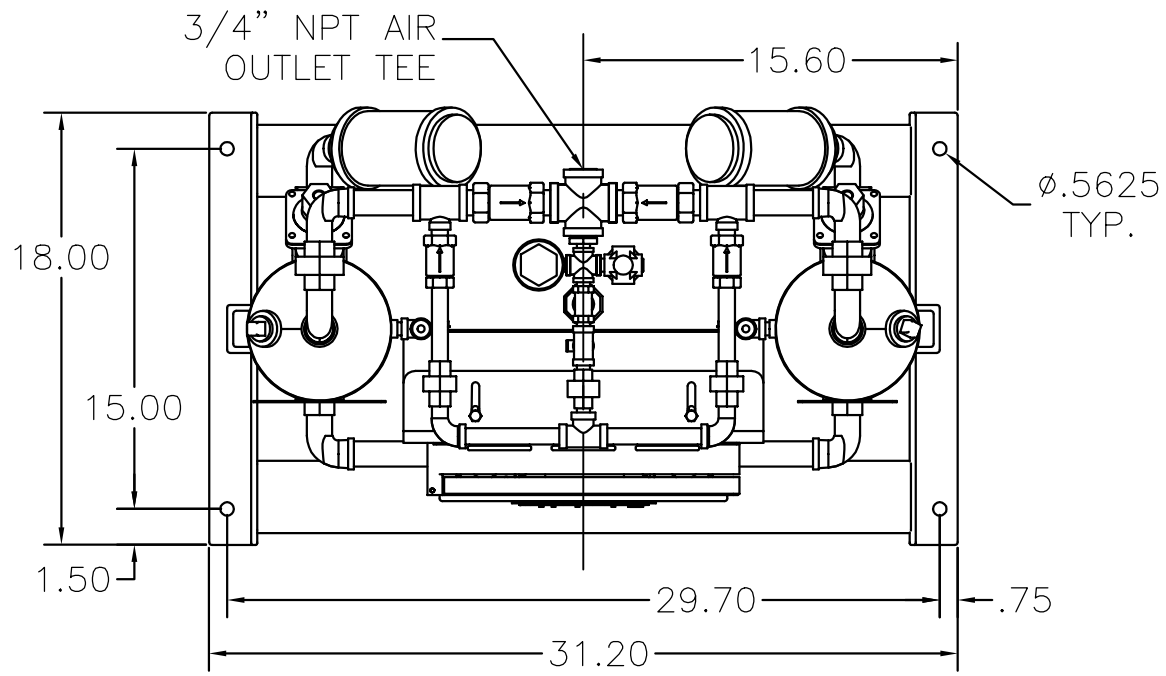

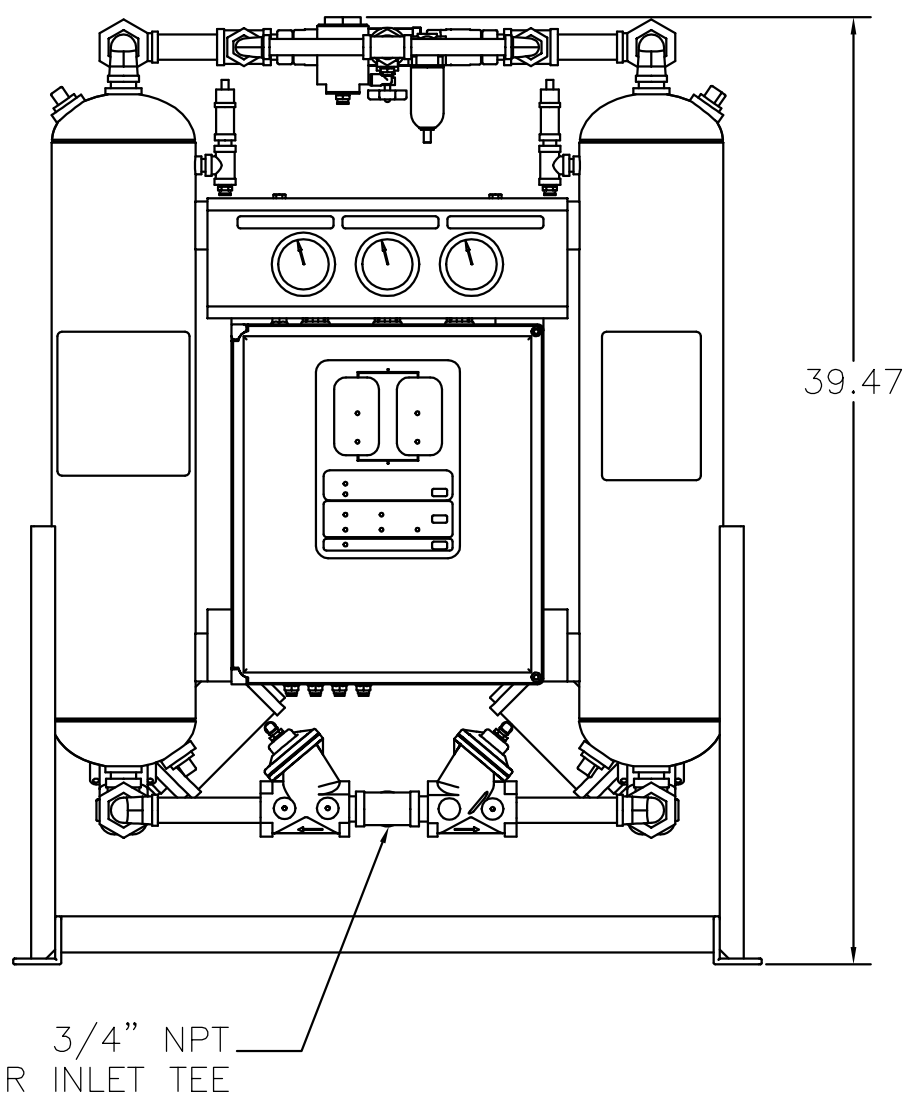

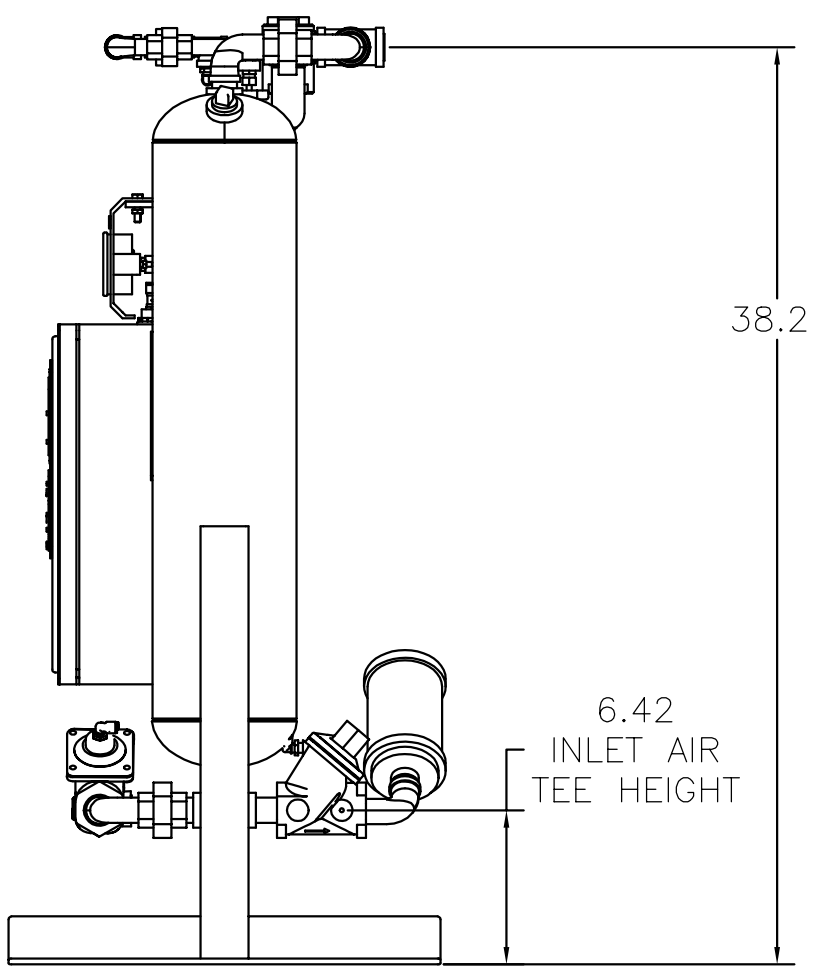

REV	ECN	DATE	DESCRIPTION	APPROVED	DO NOT SCALE DRAWING	Arrow Pneumatics	HEATLESS REGEN DRYER 35 SCFM DIMENSIONED LAYOUT
						DRAWN BY GAUGHAN	1.29.01
						D	NTS
						DWG NO. RH203A1A1A1A1A1	