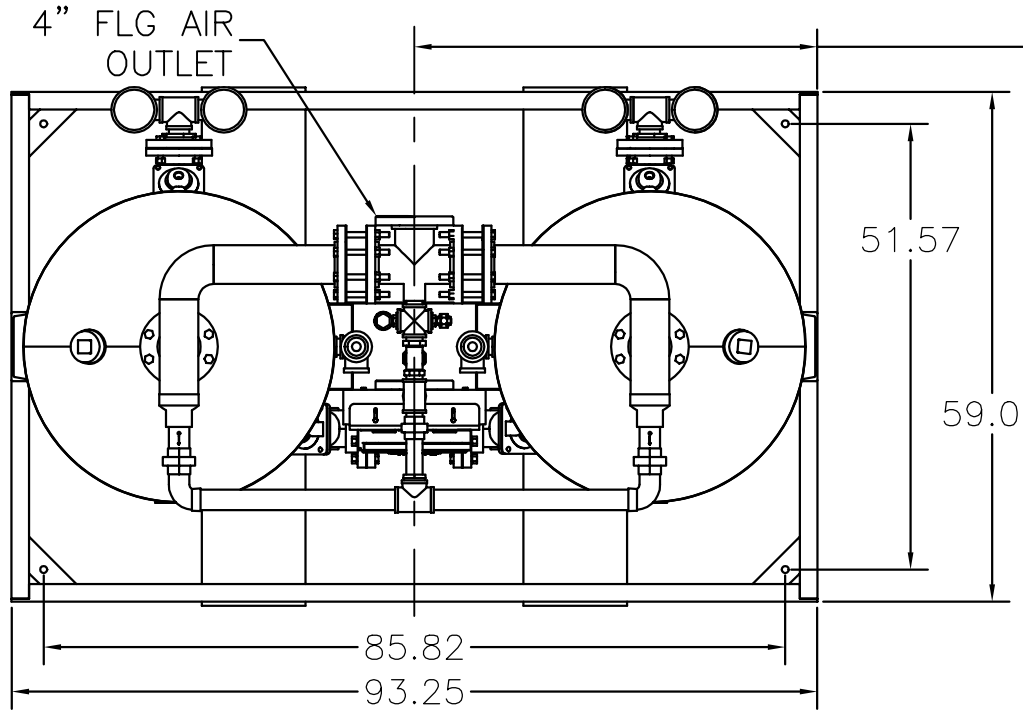

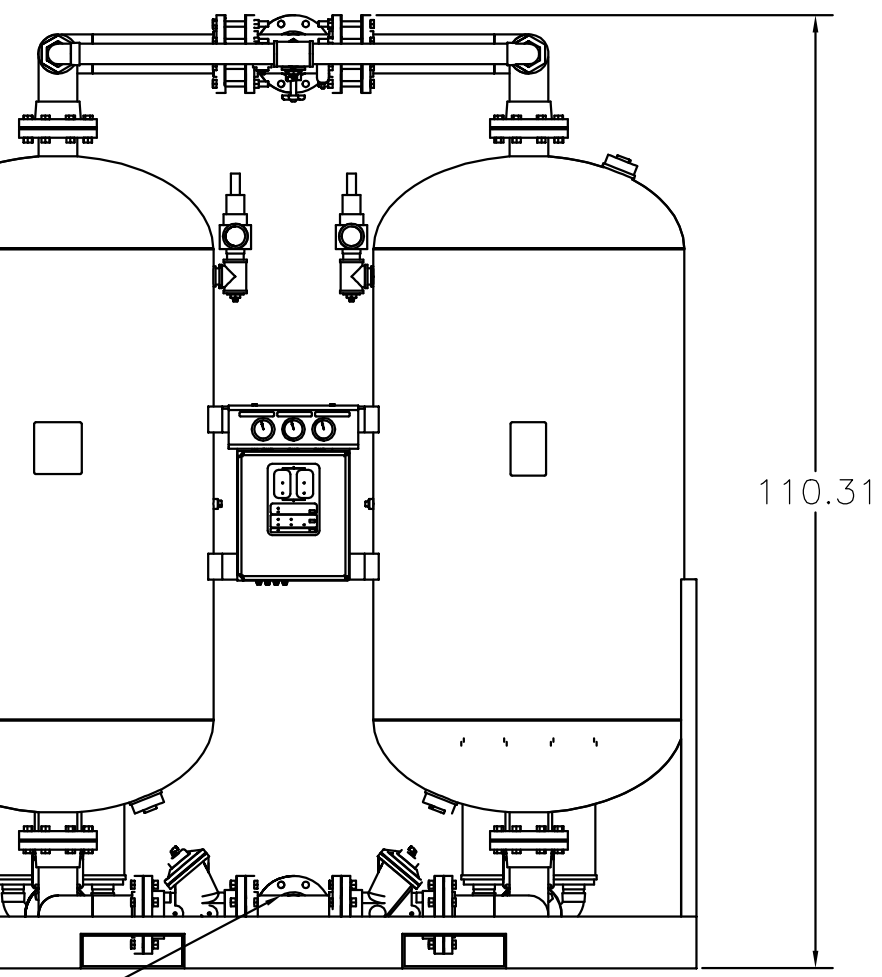

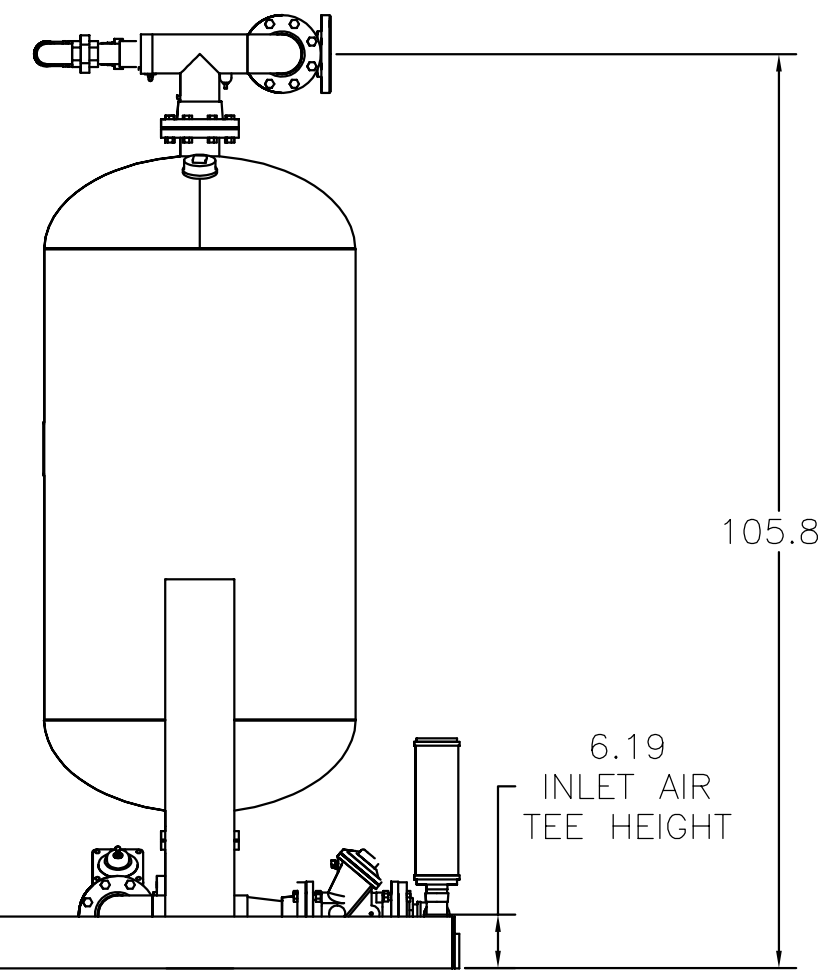

REV	SYM	DATE	DESCRIPTION	APPROVED			
			REMARKS				

DO NOT SCALE DRAWING

Arrow Pneumatics

HEATLESS REGEN DRYER
3000 SCFM
DIMENSIONED LAYOUT

DRAWN BY: GAUGHAN
DATE: 3.29.01
SIZE: D
SCALE: NTS
PART NO.: RH224A1A1A1A1A1