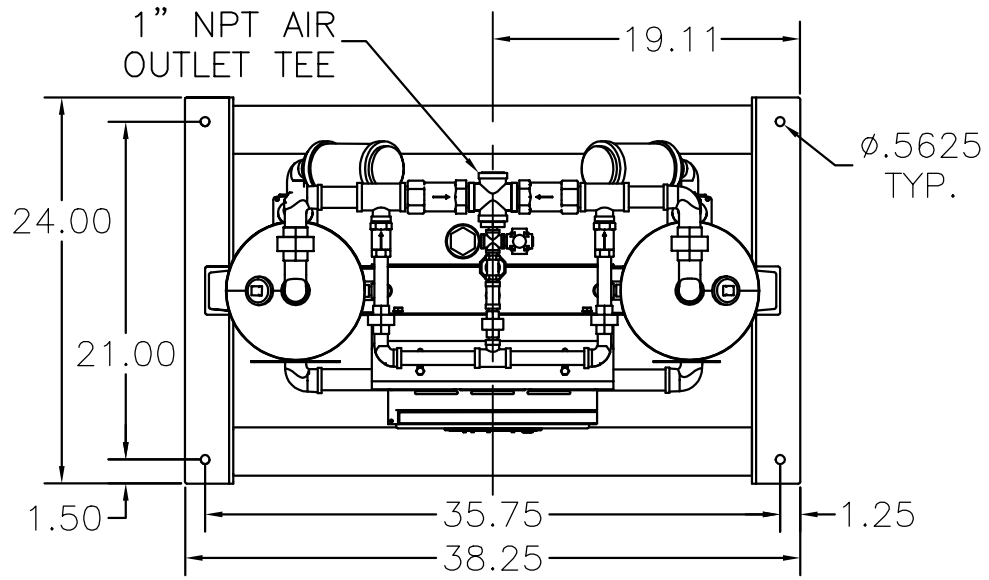

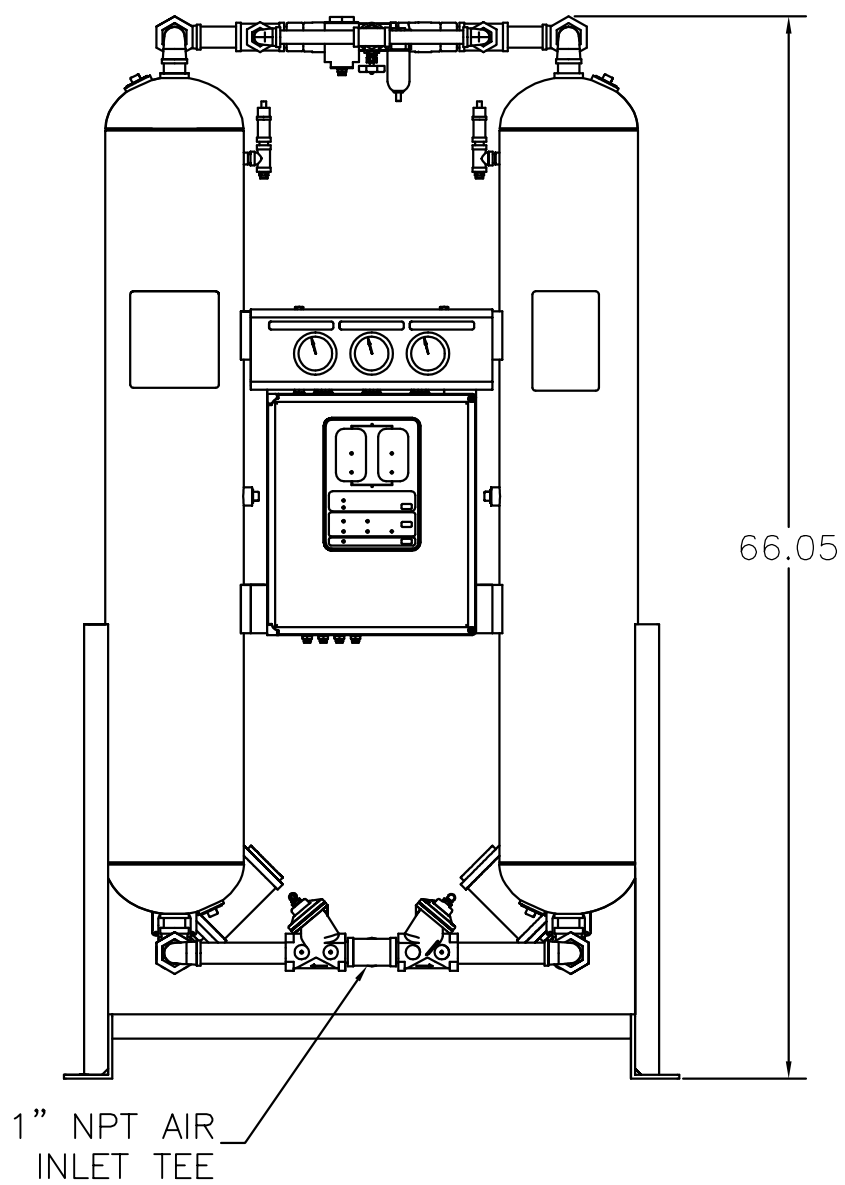

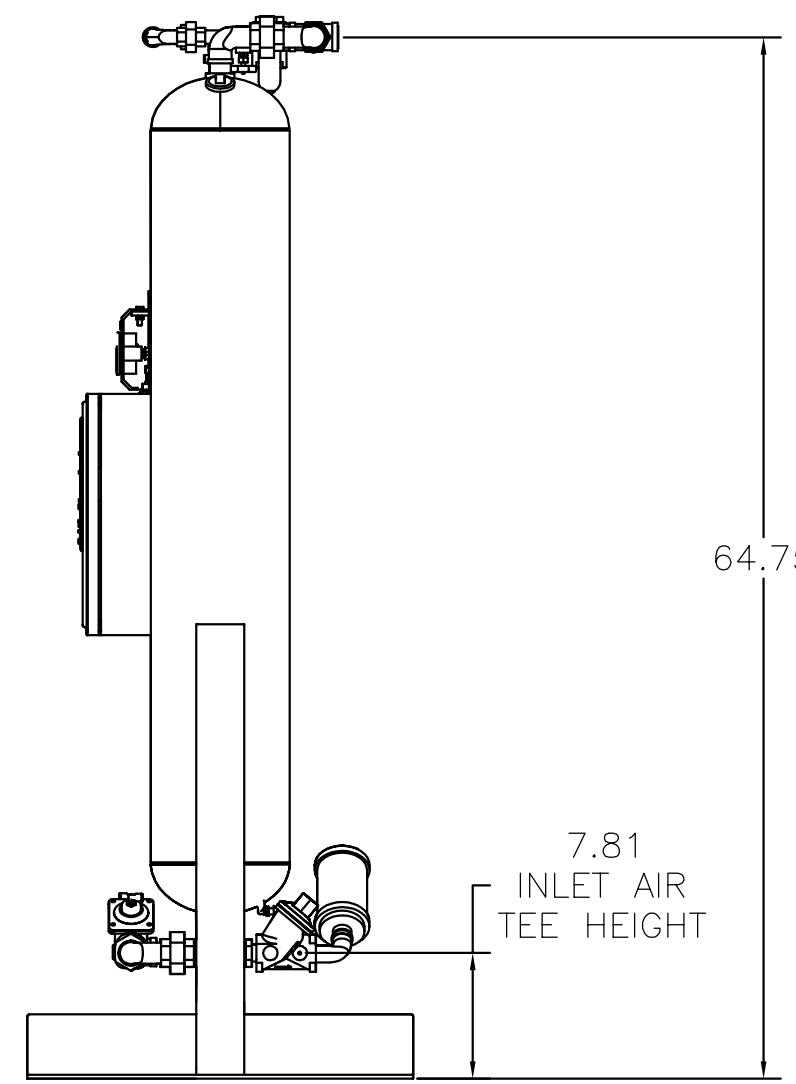

REV	ECN	DATE	DESCRIPTION	APPROVED	DO NOT SCALE DRAWING		

Arrow Pneumatics

HEATLESS REGEN DRYER
125 SCFM
DIMENSIONED LAYOUT

DRAWN BY GAUGHAN | DATE 2.22.01 | SIZE D | SCALE NTS | REV

DWG NO. RH207A1A1A1A1A1