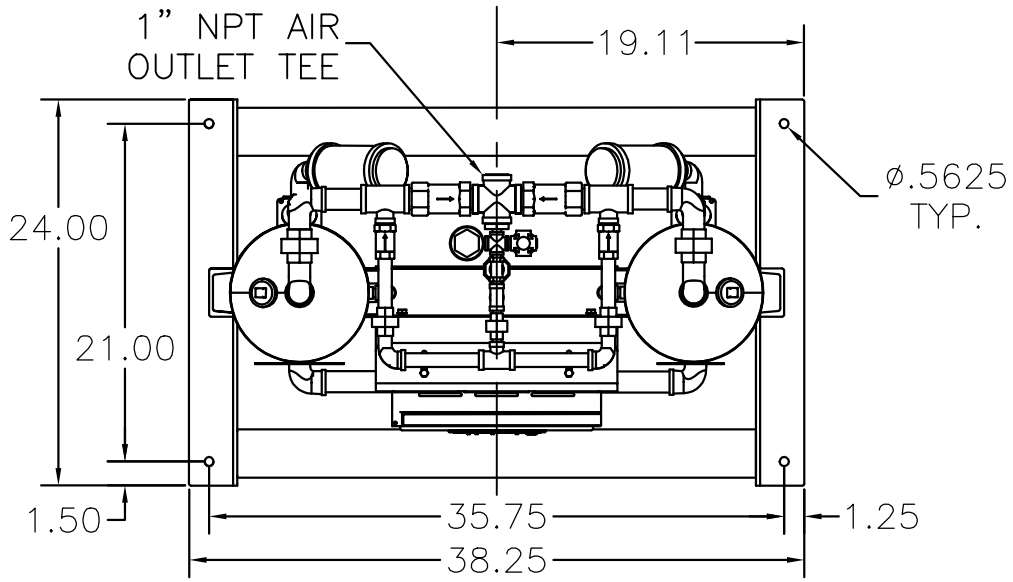

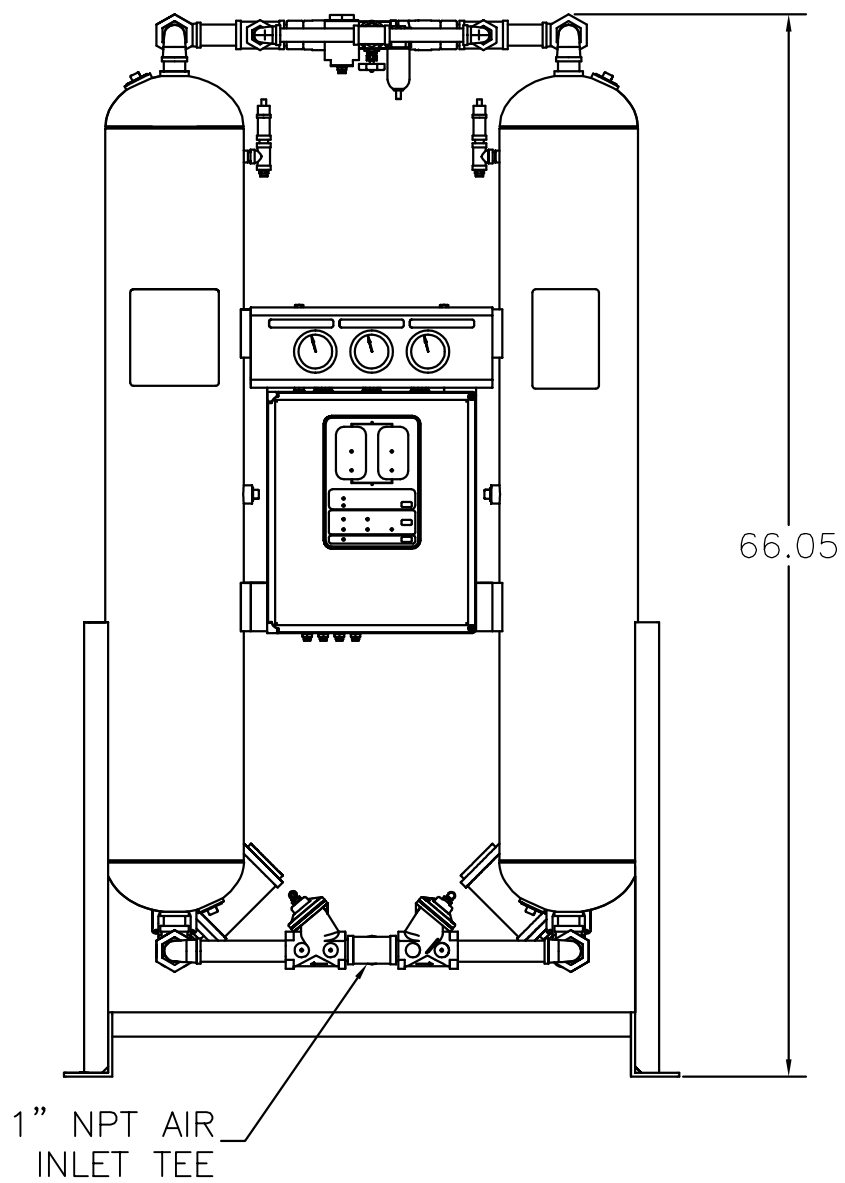

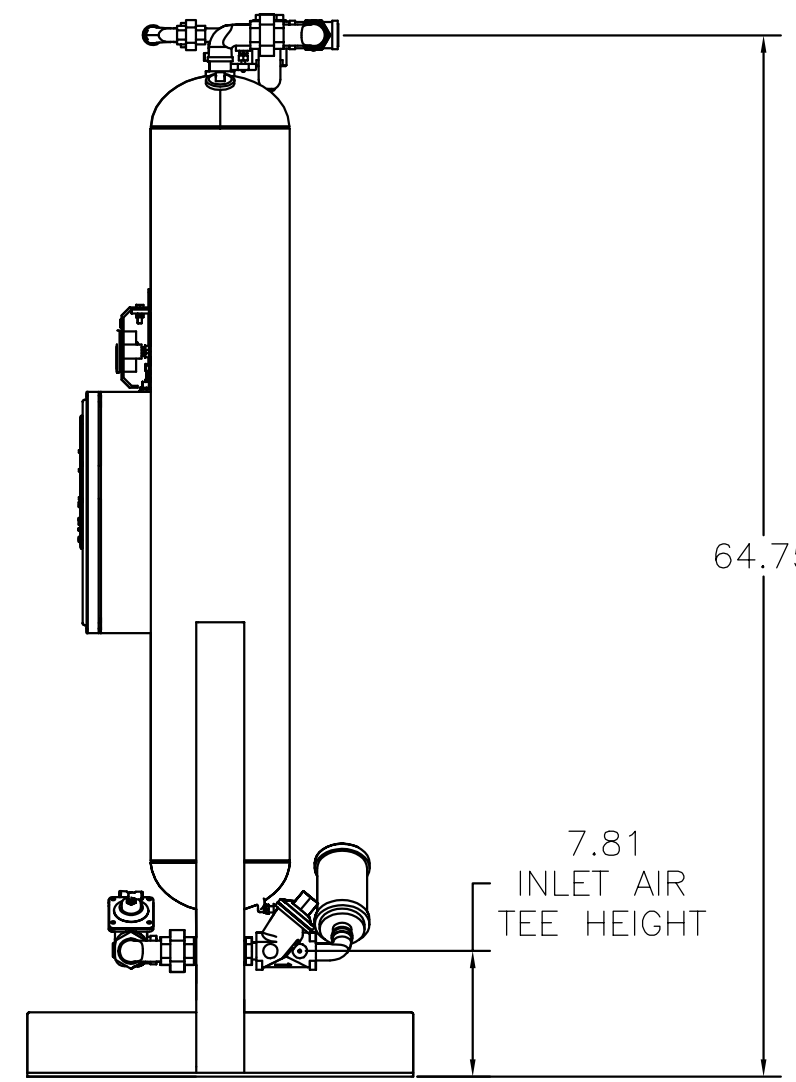

REV	ECN	DATE	DESCRIPTION	APPROVED	DO NOT SCALE DRAWING		Arrow Pneumatics	HEATLESS REGEN DRYER 100 SCFM DIMENSIONED LAYOUT
							DRAWN BY GAUGHAN	DATE 2.22.01 · SIZE D · SCALE NTS · REV
								PART NO. RH206A1A1A1A1A1