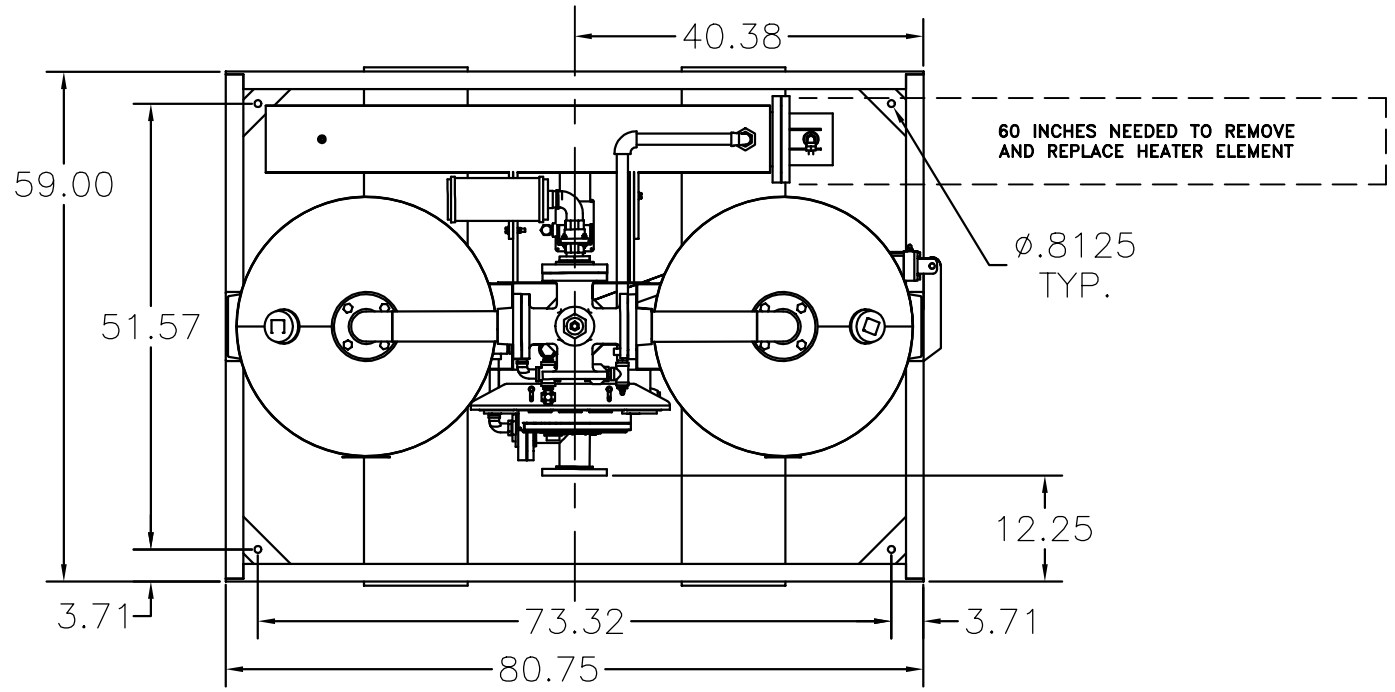

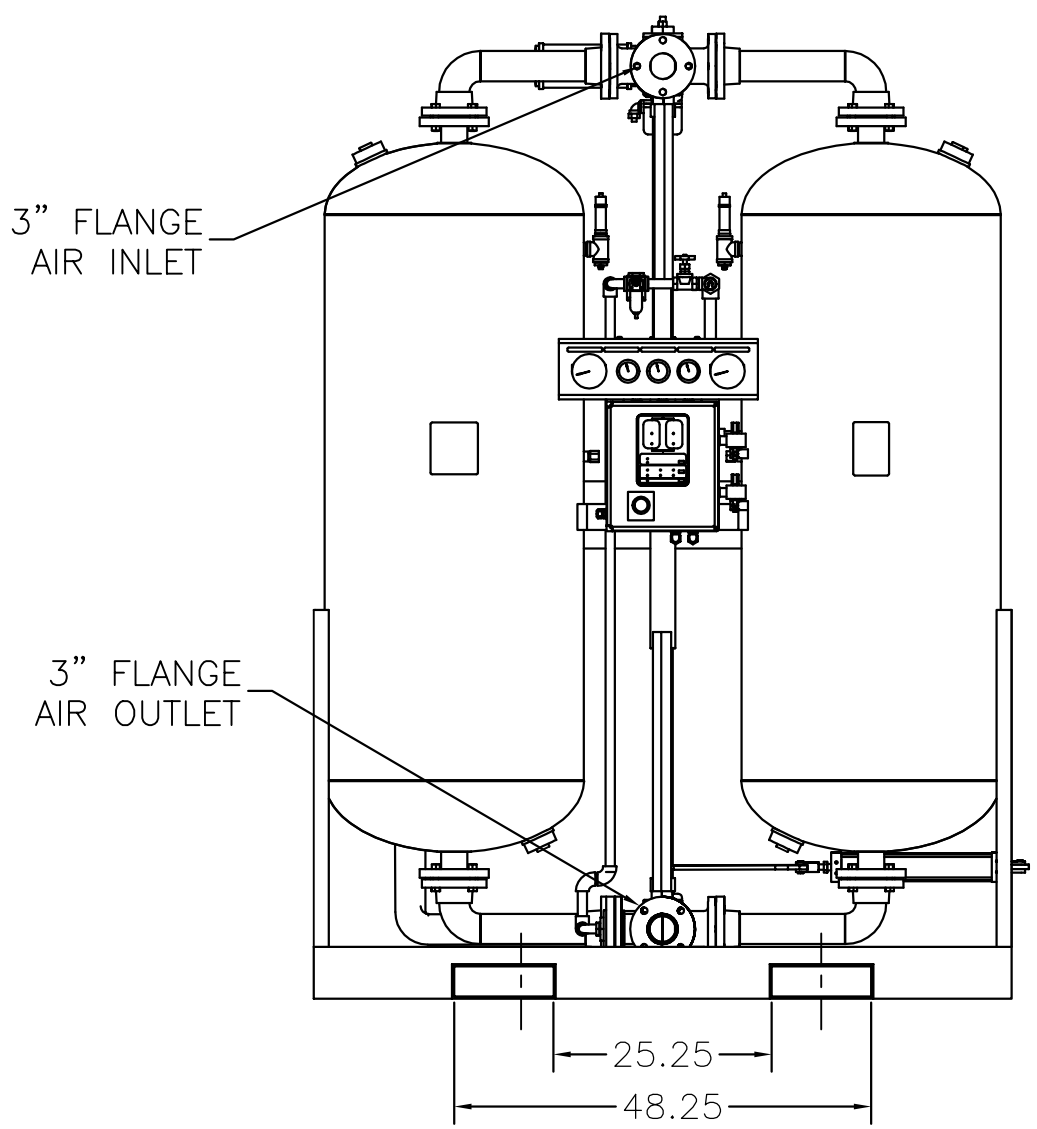

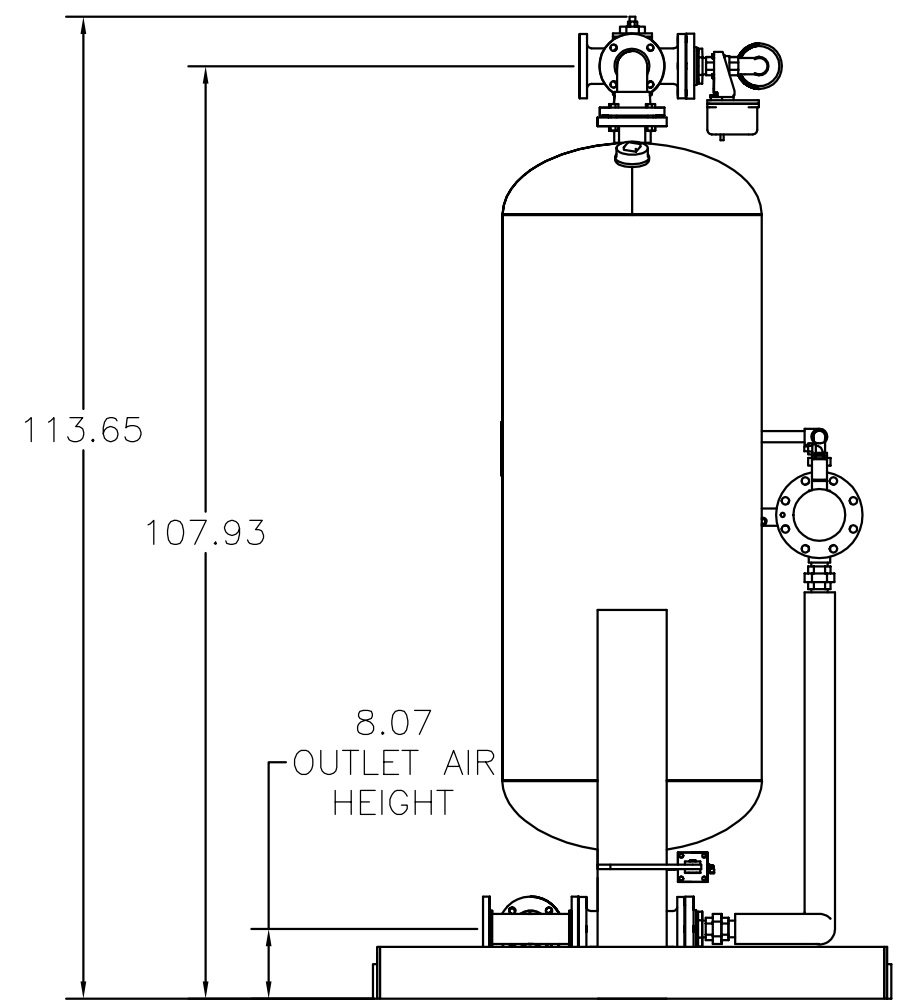

REV	ECN	DATE	DESCRIPTION	APPROVED

DO NOT SCALE DRAWING

Arrow Pneumatics

HEATED REGEN DRYER
2100 SCFM
DIMENSIONED LAYOUT

DRAWN BY: GAUGHAN
DATE: 6.01.01
SIZE: D
SCALE: NTS
FILE NO.: RE248A2A1A1A1A1