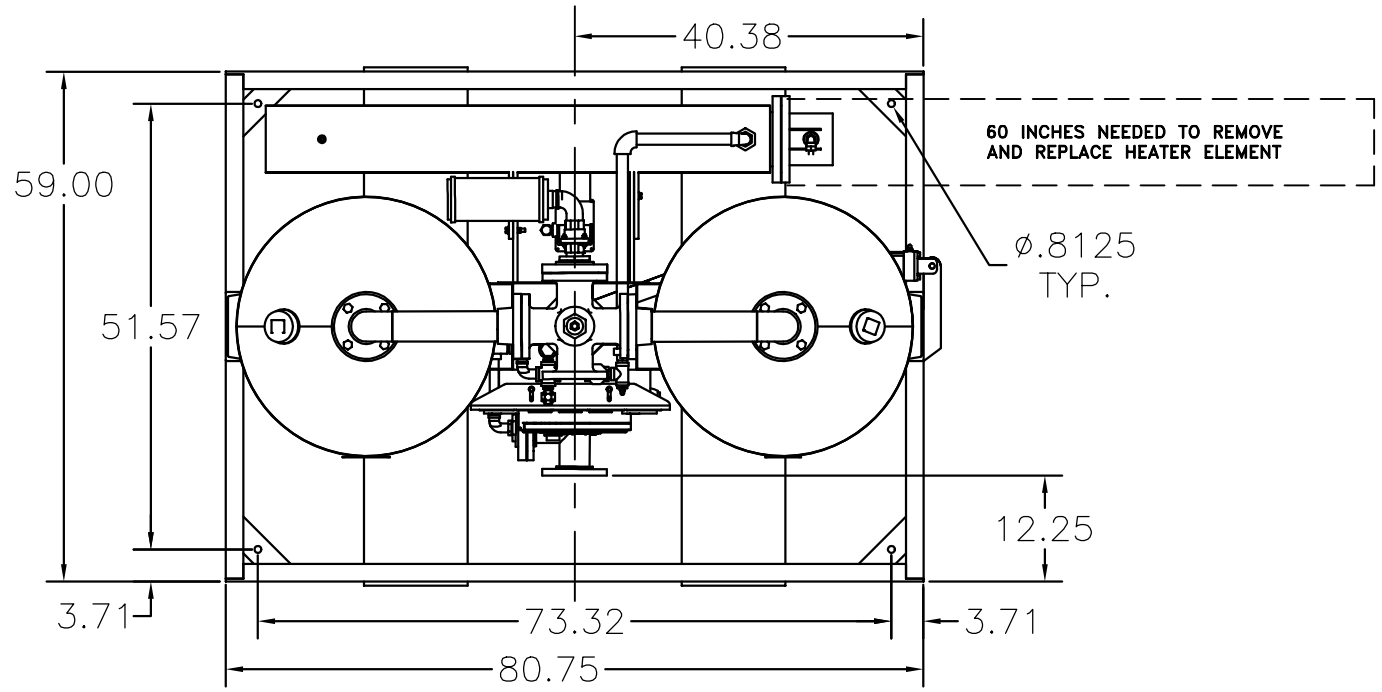

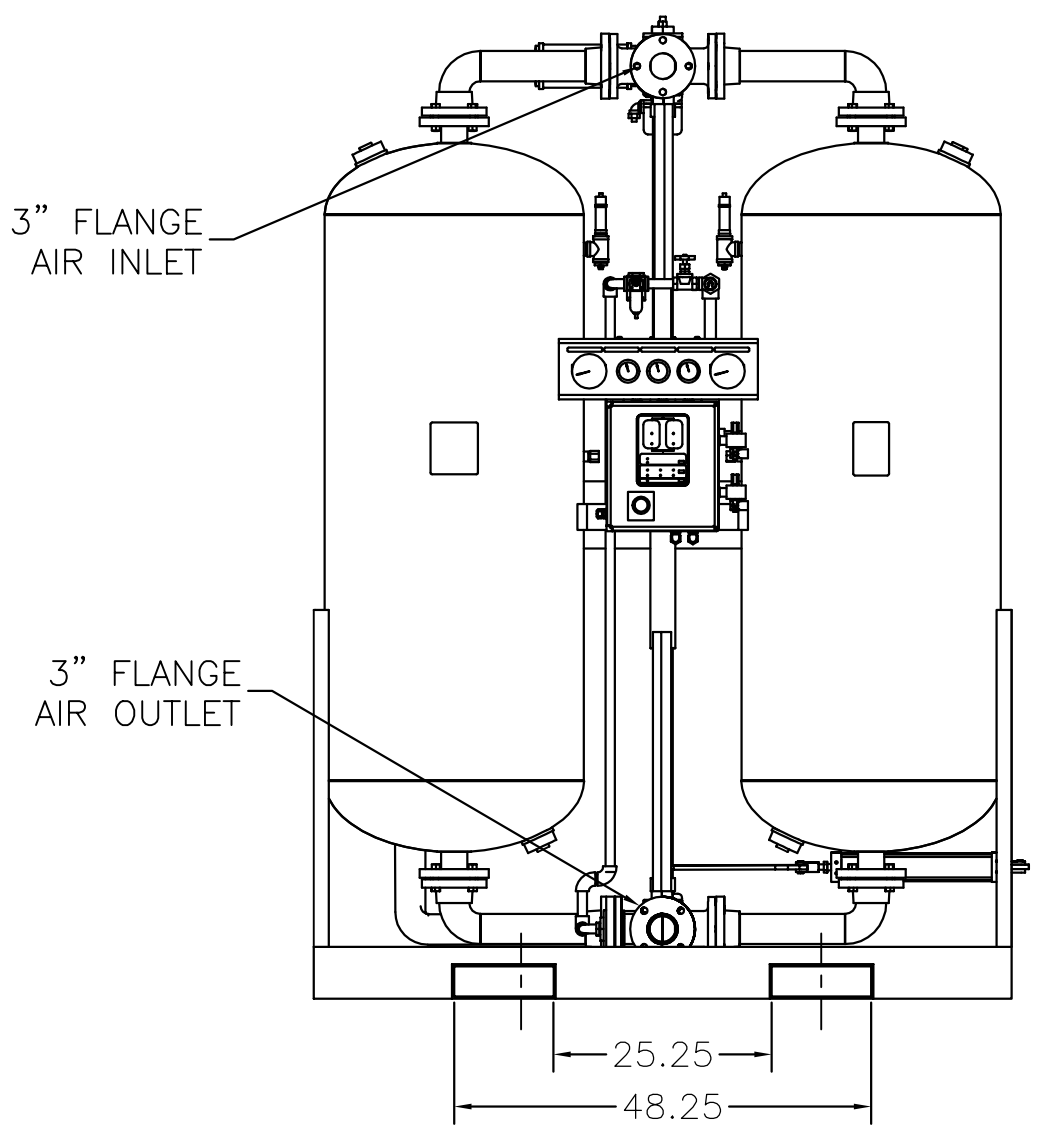

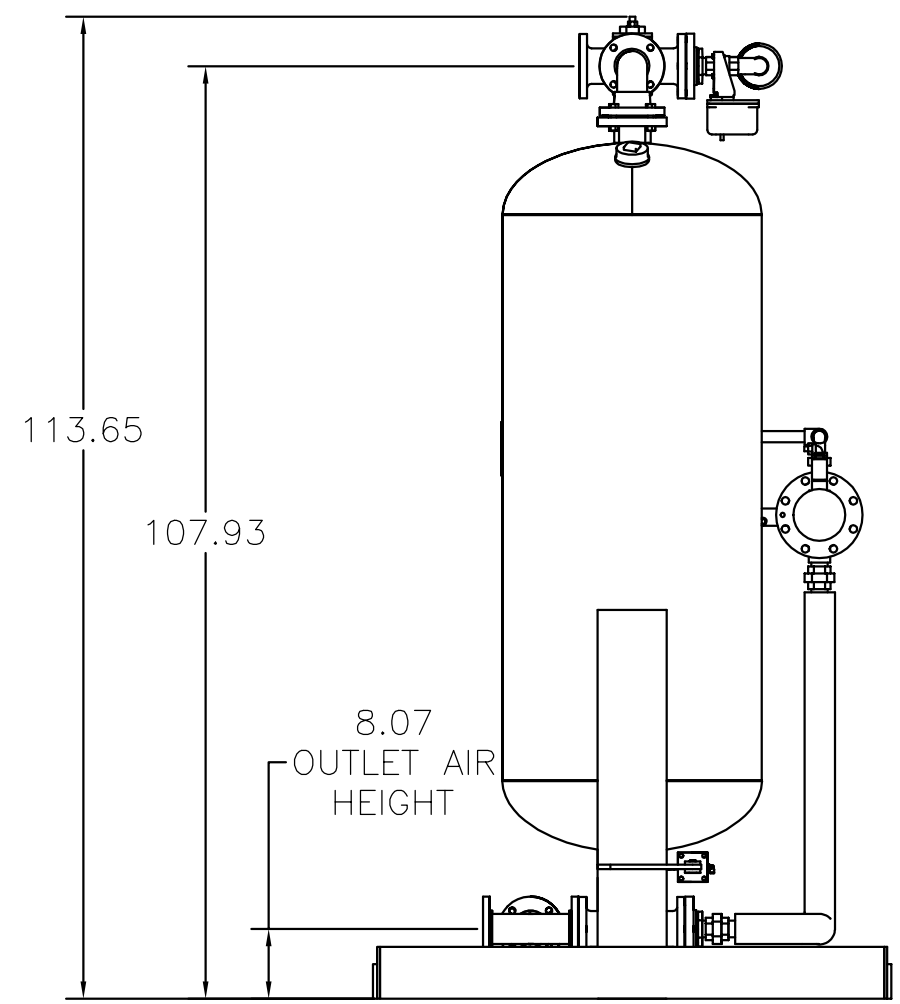

REV	ECN	DATE	DESCRIPTION	APPROVED

DO NOT SCALE DRAWING

Arrow Pneumatics

HEATED REGEN DRYER
1800 SCFM
DIMENSIONED LAYOUT

DRAWN BY GAUGHAN | DATE 6.01.01 | SIZE D | SCALE NTS | SHEET

DWG NO. RE247A2A1A1A1A1