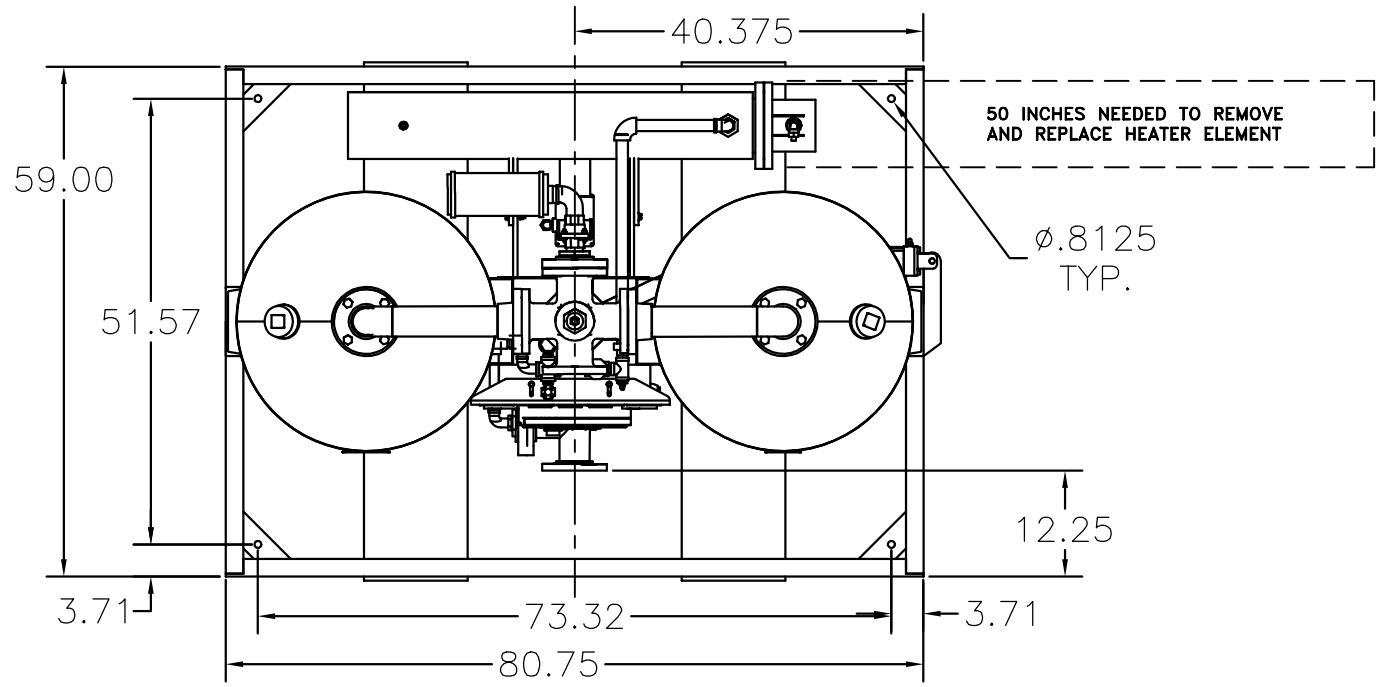

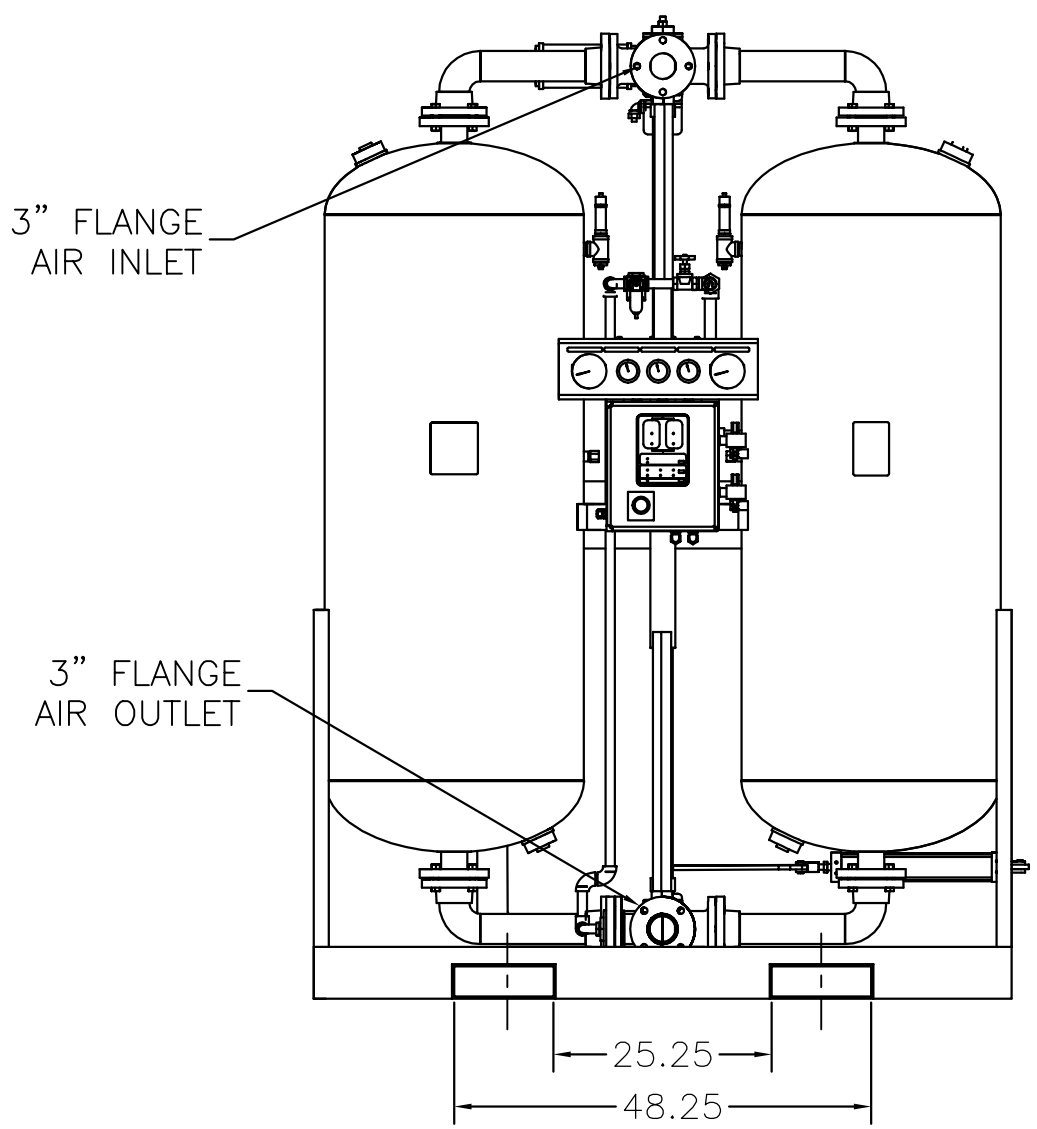

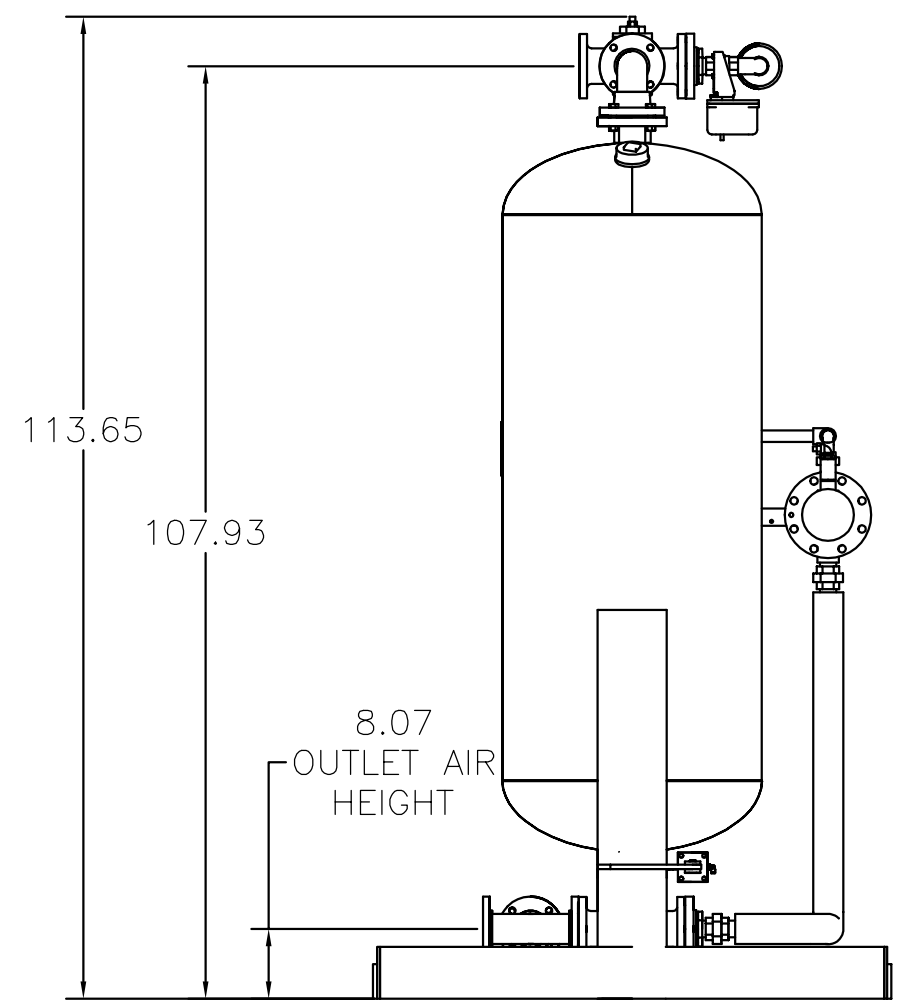

REV	ECN	DATE	DESCRIPTION	APPROVED

DO NOT SCALE DRAWING

Arrow Pneumatics

HEATED REGEN DRYER
1500 SCFM
DIMENSIONED LAYOUT

DRAWN BY: GAUGHAN
DATE: 6.01.01
SIZE: D
SCALE: NTS
REV:
FILE NO.: RE246A2A1A1A1A1