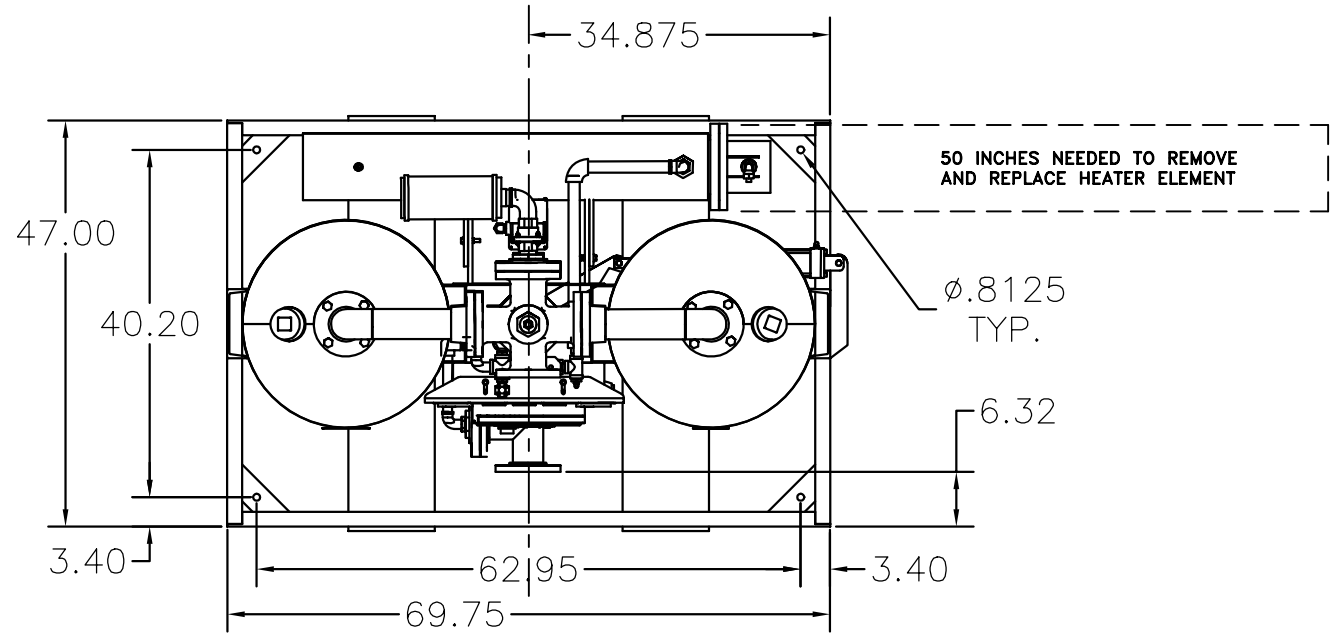

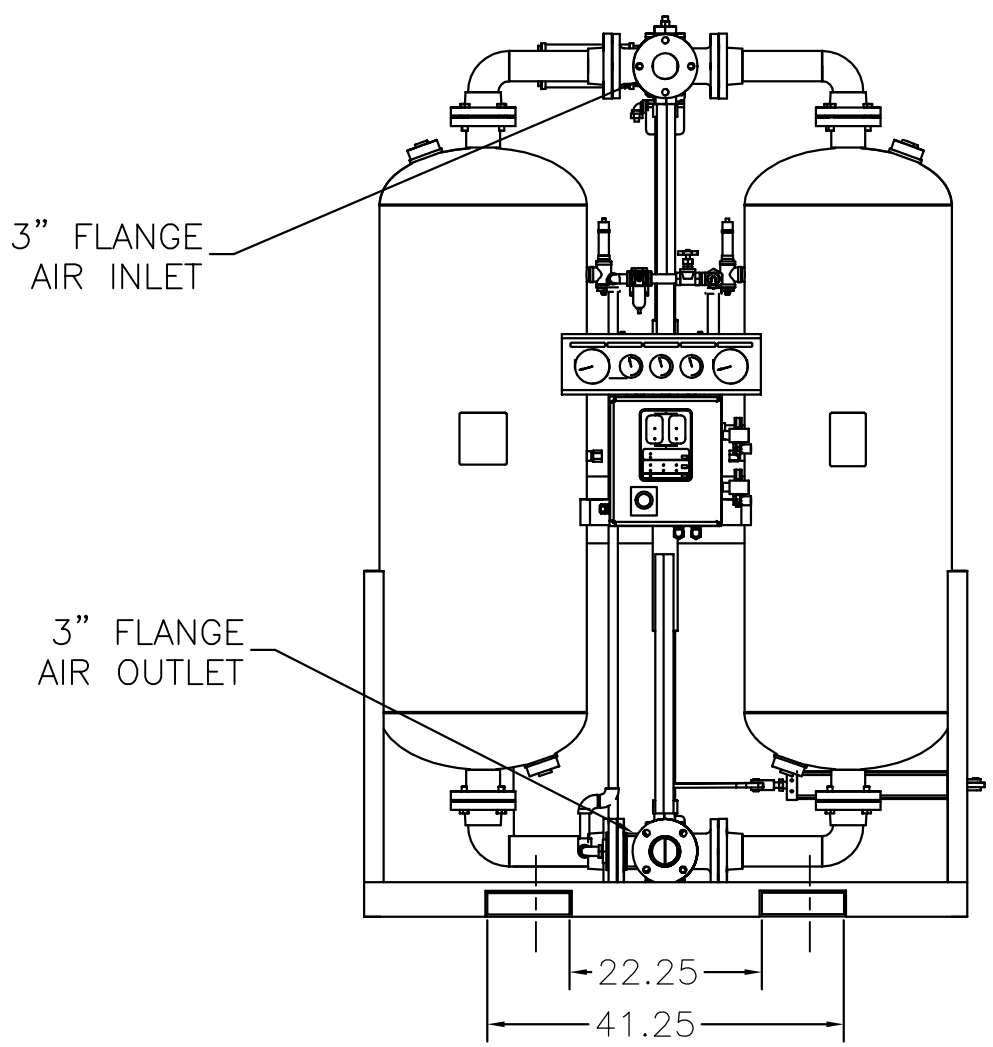

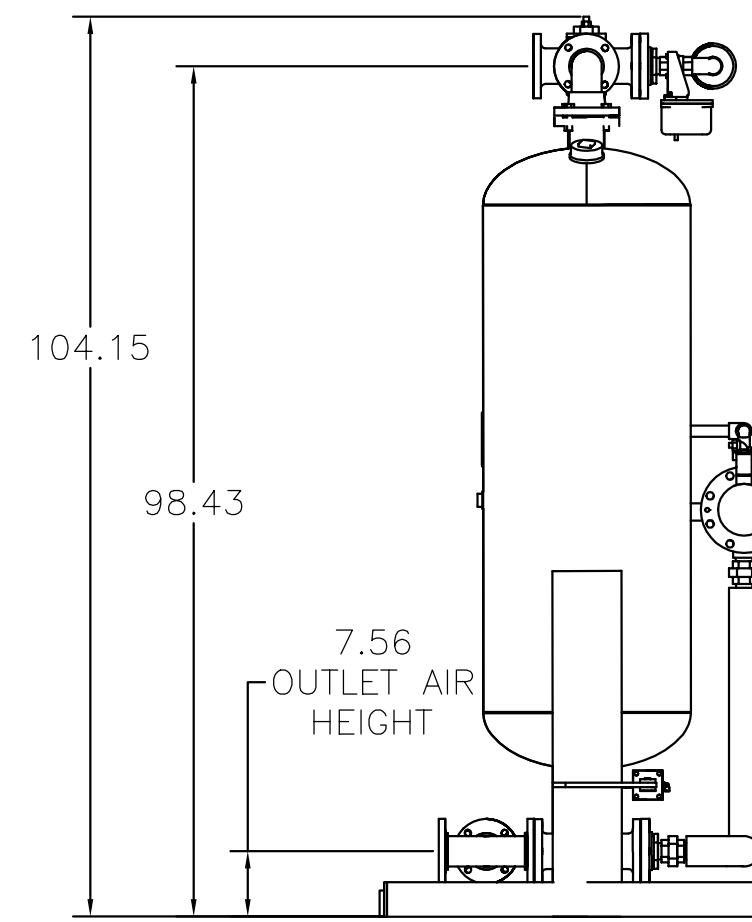

REV	SYM	DATE	DESCRIPTION	APPROVED	DO NOT SCALE DRAWING		Arrow Pneumatics	HEATED REGEN DRYER 1300 SCFM DIMENSIONED LAYOUT
							DRAWN BY GAUGHAN	DATE 6.01.01 · SIZE D · SCALE NTS · REV
							CHECKED BY	PART NO. RE245A2A1A1A1A1