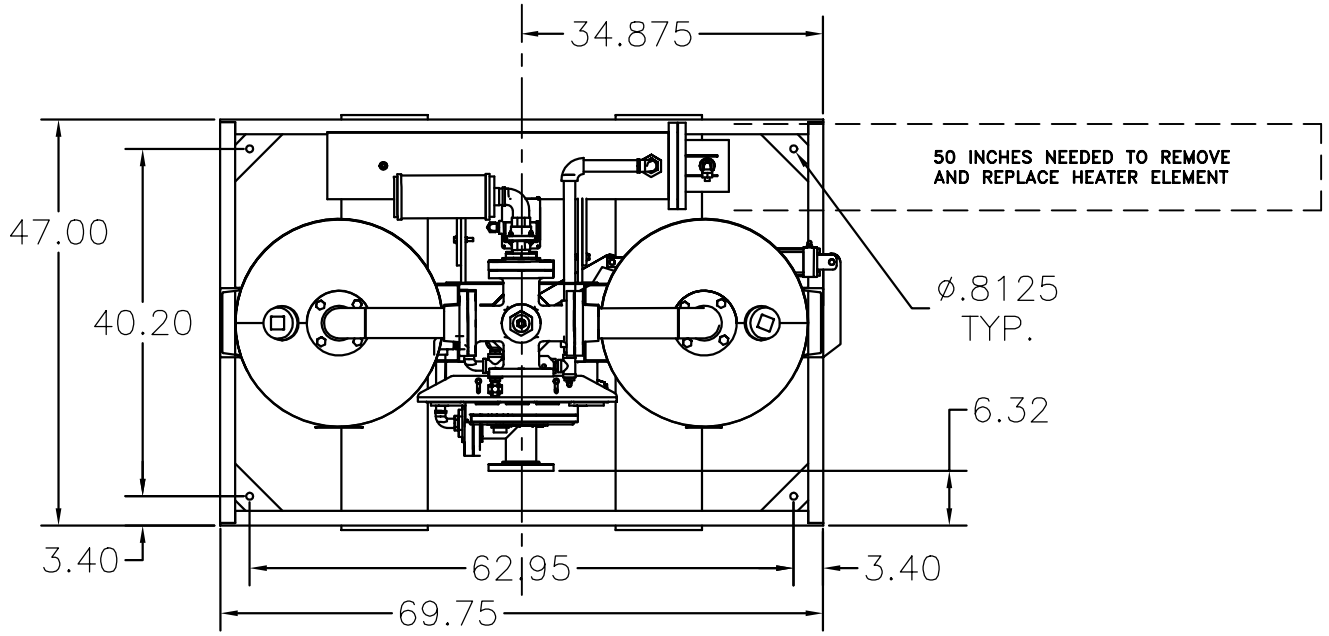

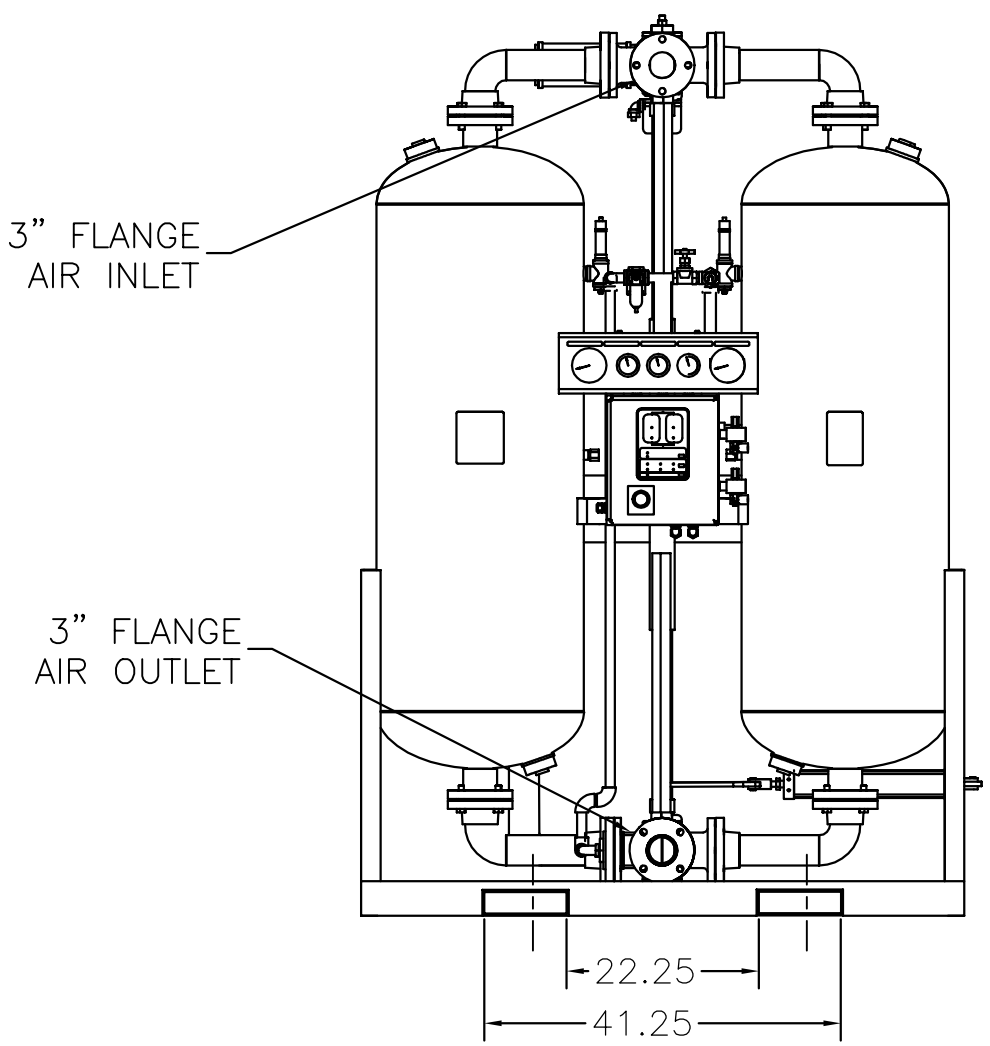

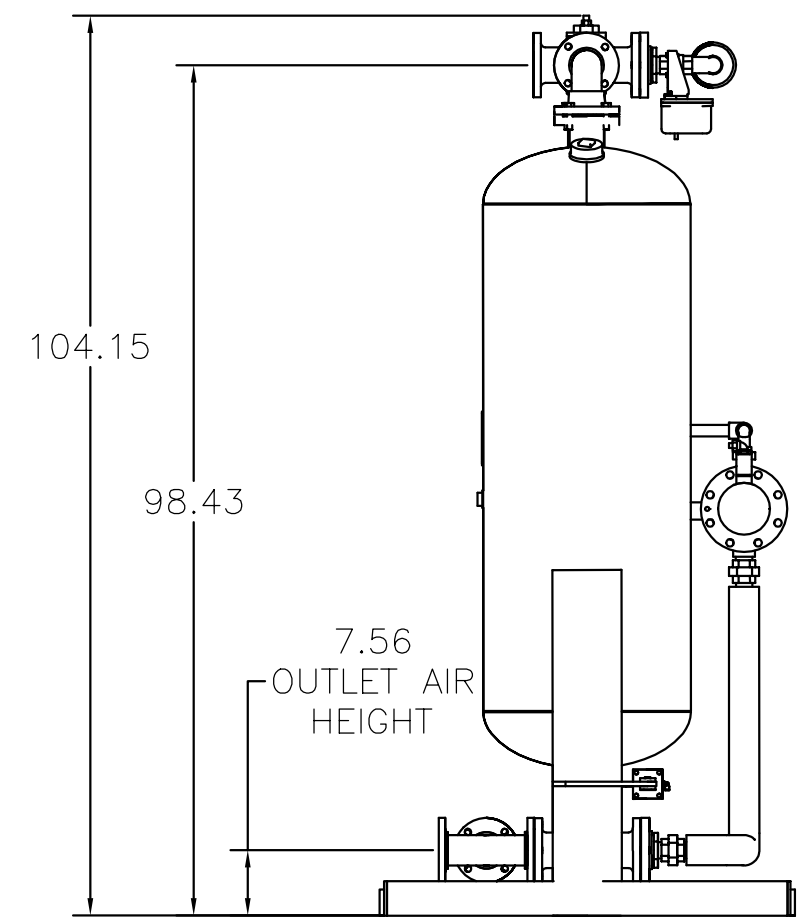

REV	SYM	DATE	DESCRIPTION	APPROVED	DO NOT SCALE DRAWING		Arrow Pneumatics	HEATED REGEN DRYER 1100 SCFM DIMENSIONED LAYOUT
							DRAWN BY GAUGHAN	DATE 6.01.01 · D · SCALE NTS · REV
							CHECKED BY	PART NO. RE244A2A1A1A1A1