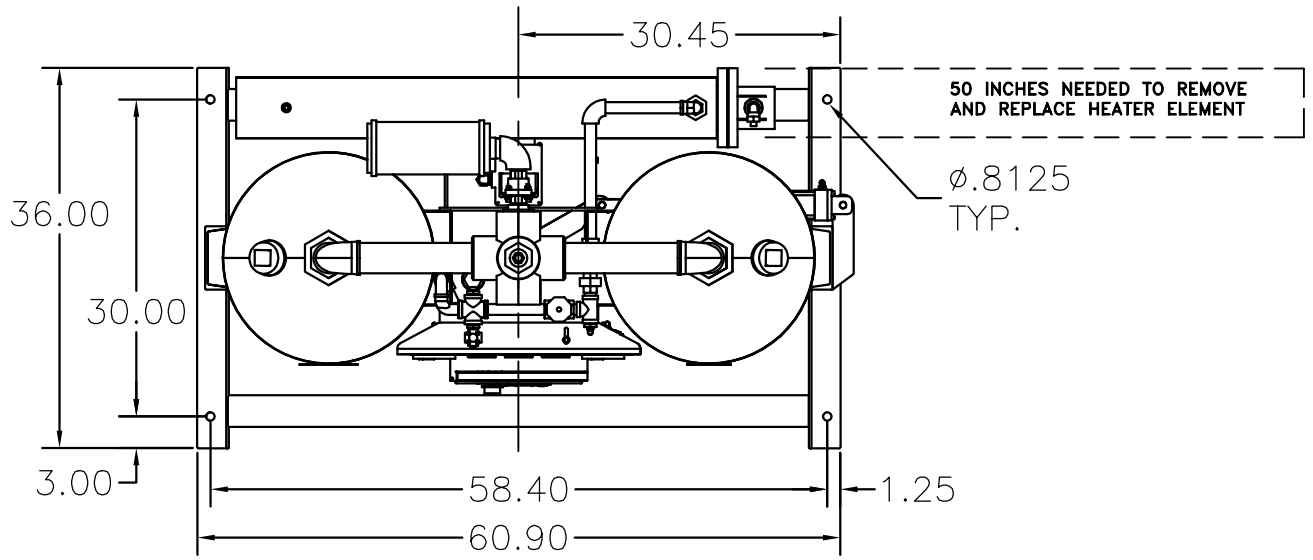

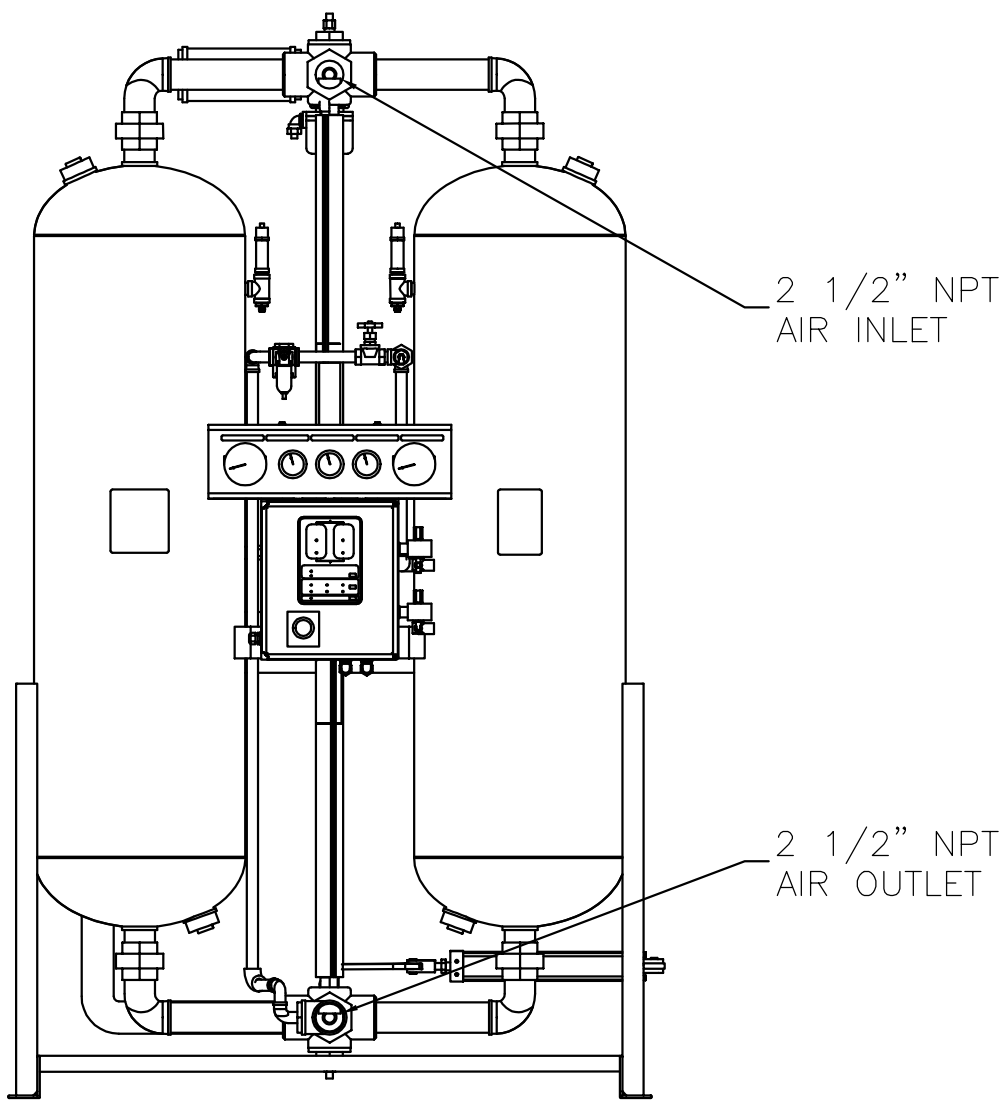

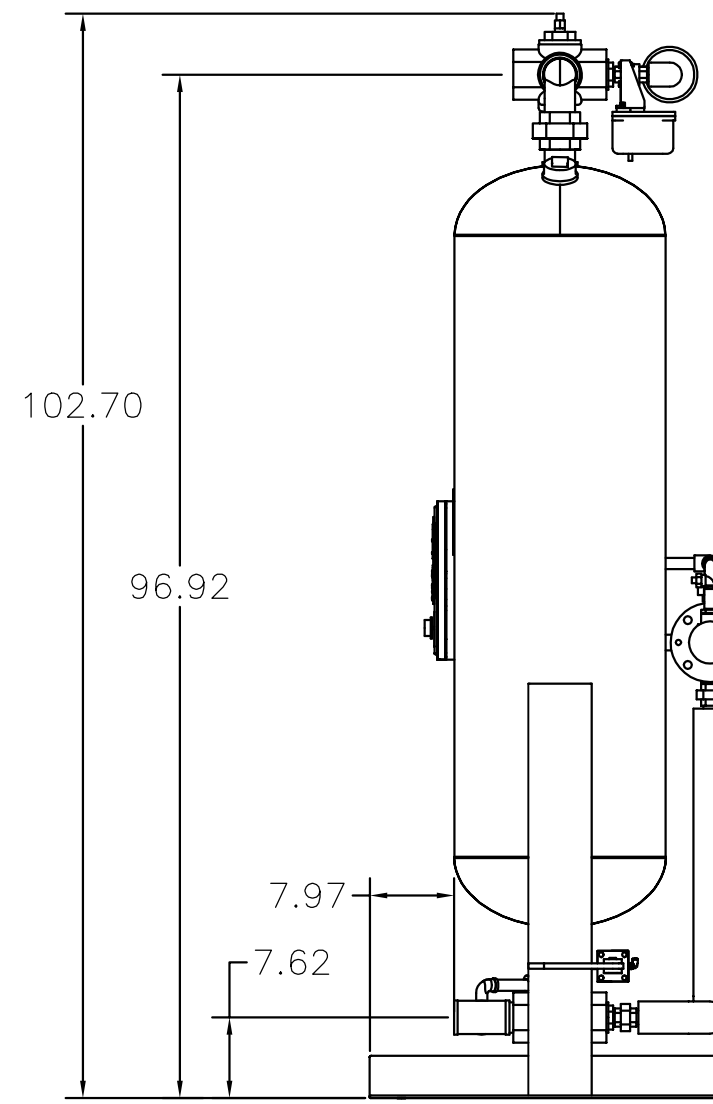

REV	ECN	DATE	DESCRIPTION	APPROVED	DO NOT SCALE DRAWING		Arrow Pneumatics	HEATED REGEN DRYER 750 SCFM DIMENSIONED LAYOUT
							DRAWN BY GAUGHAN	DATE 6.01.01 · SIZE D · SCALE NTS · DWG NO. RE242A2A1A1A1A1