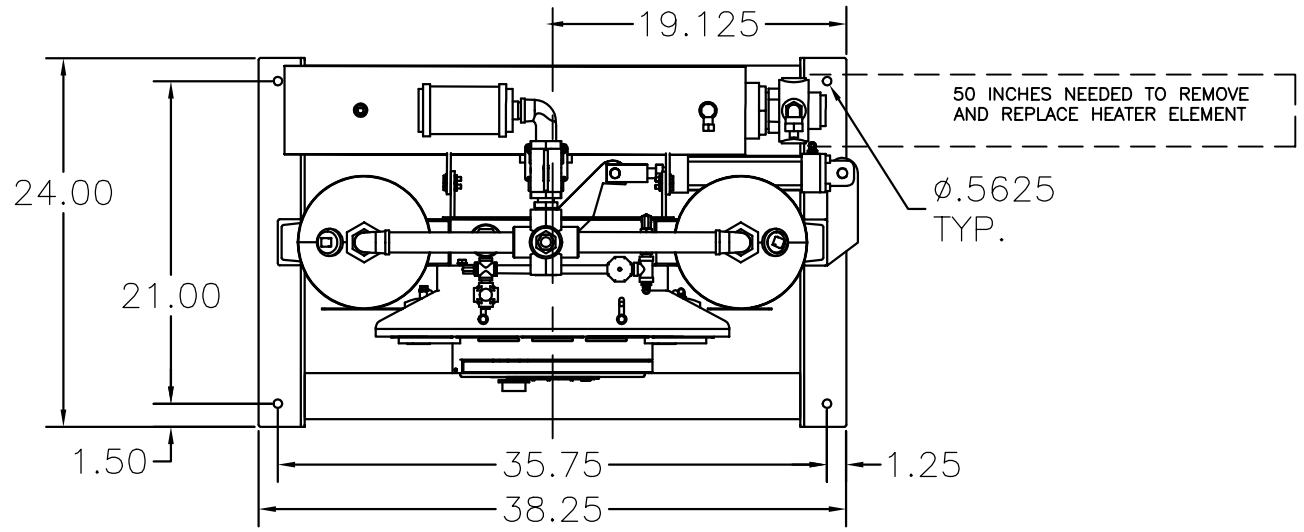

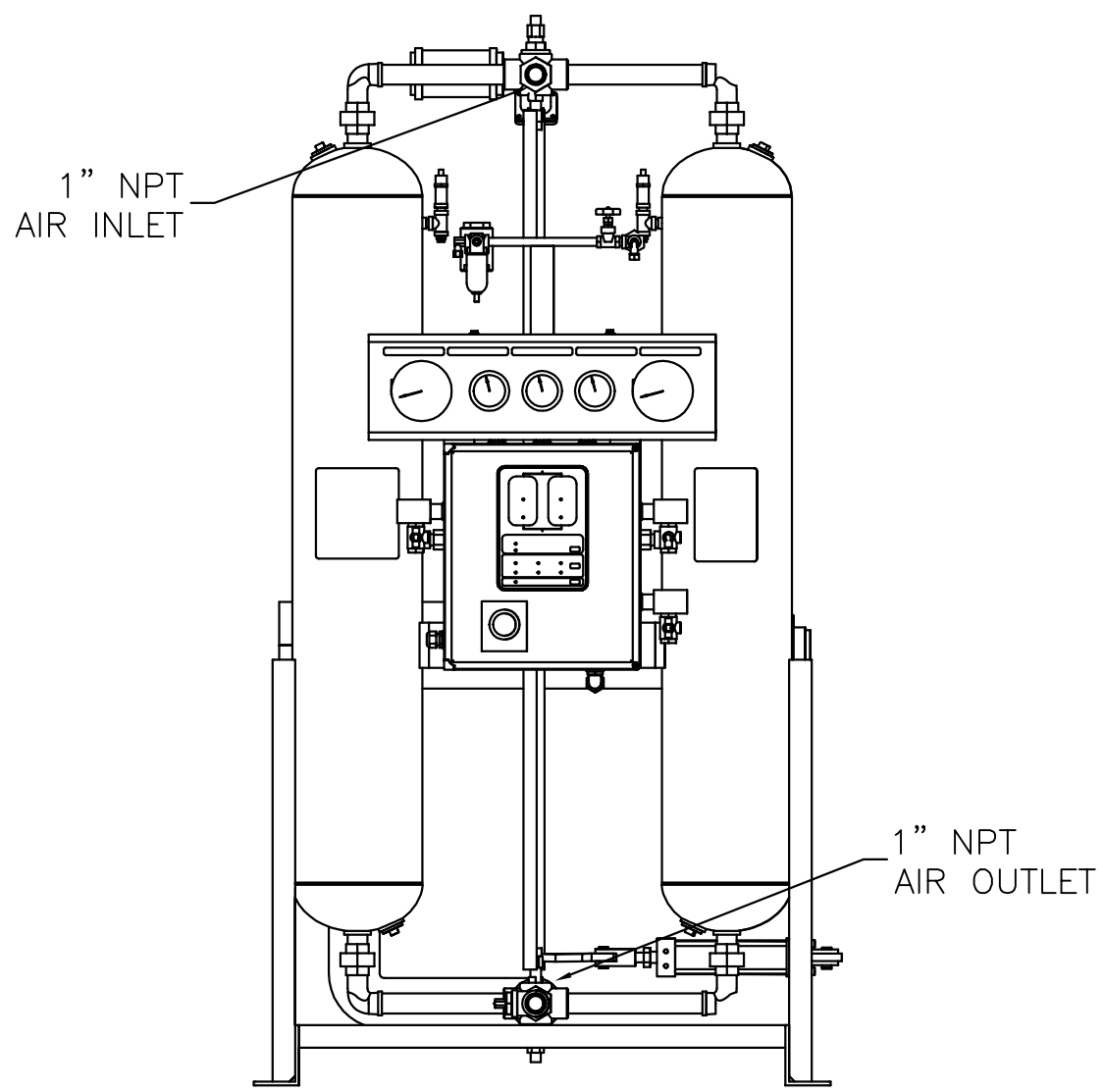

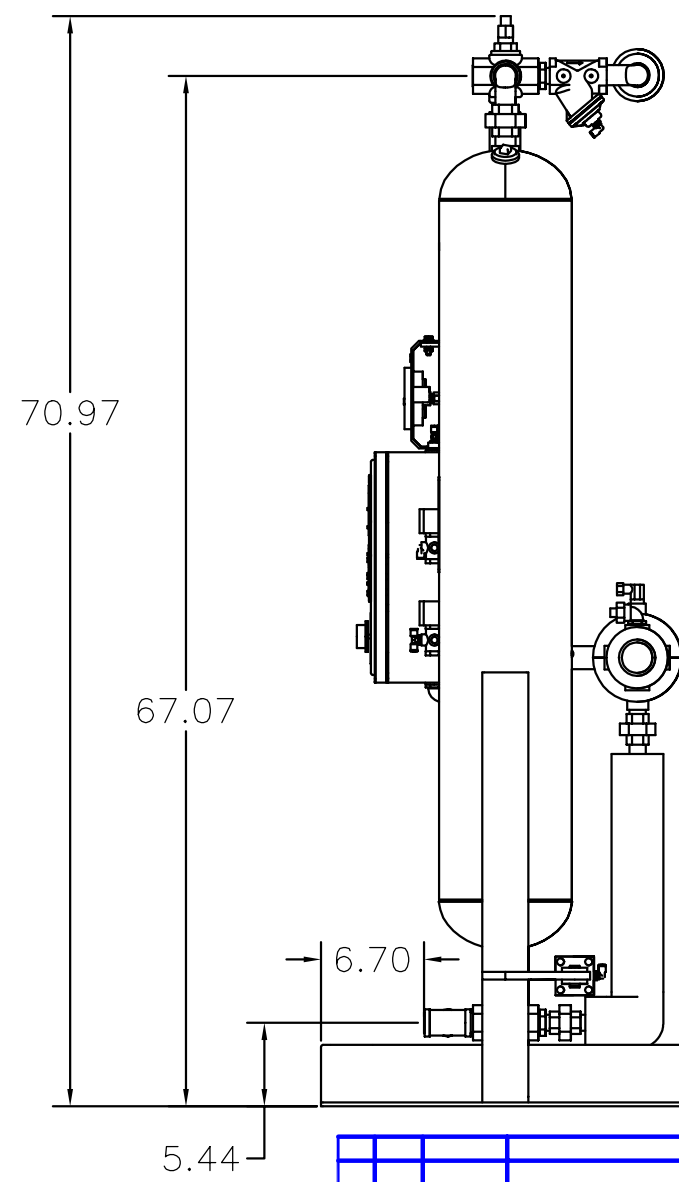

					DO NOT SCALE DRAWING		HEATED REGEN DRYER 100 SCFM DIMENSIONED LAYOUT
						Arrow Pneumatics	
						GAUGHAN	6.01.01	D	NTS
							RE233A1A1A1A1A1