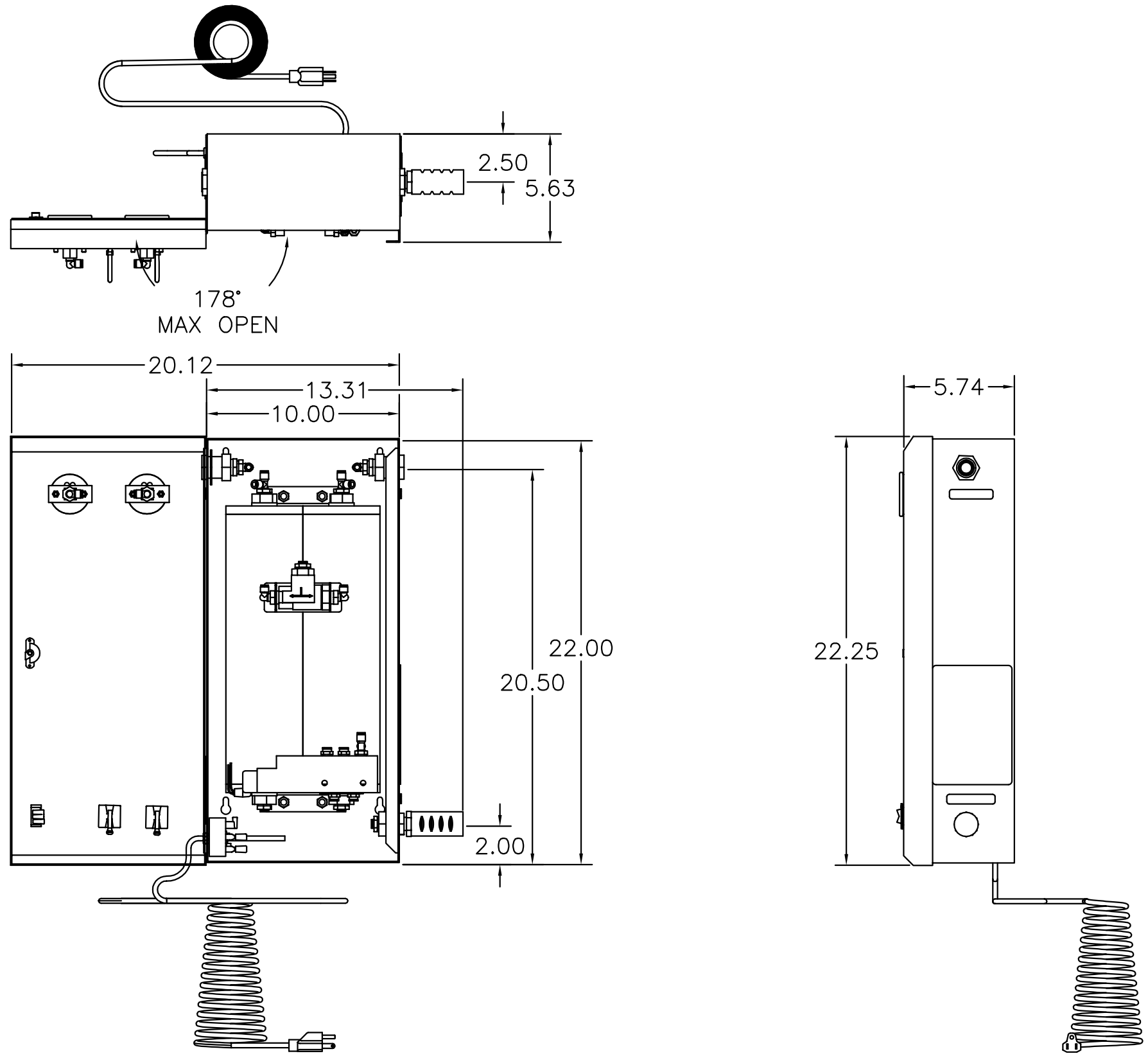

								RH110A1A1A1A1A1 OVERALL DIMENSIONS
					DO NOT SCALE DRAWING		GAUGHAN	2.23.01	D	NTS
								RH110A1A1A1A1A1