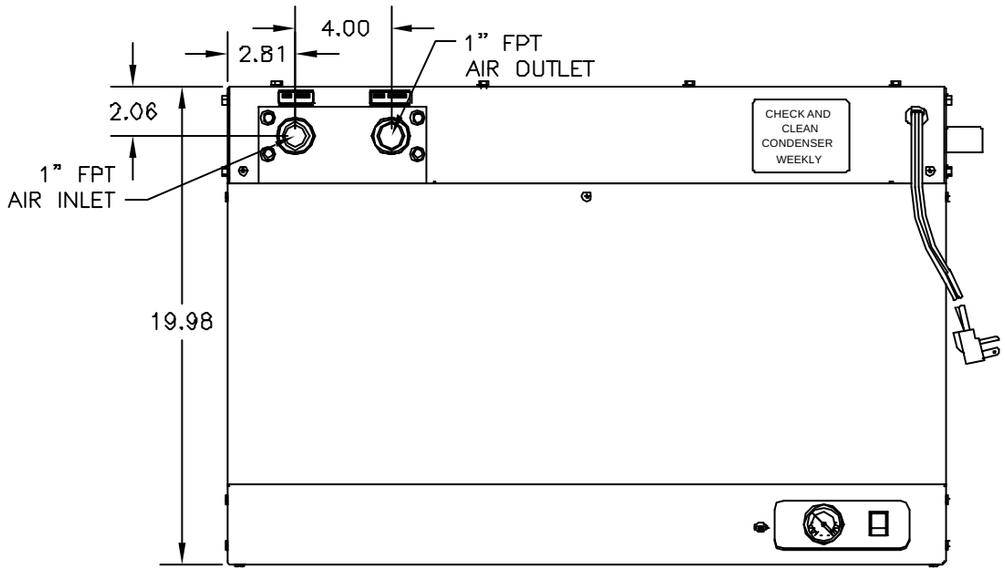

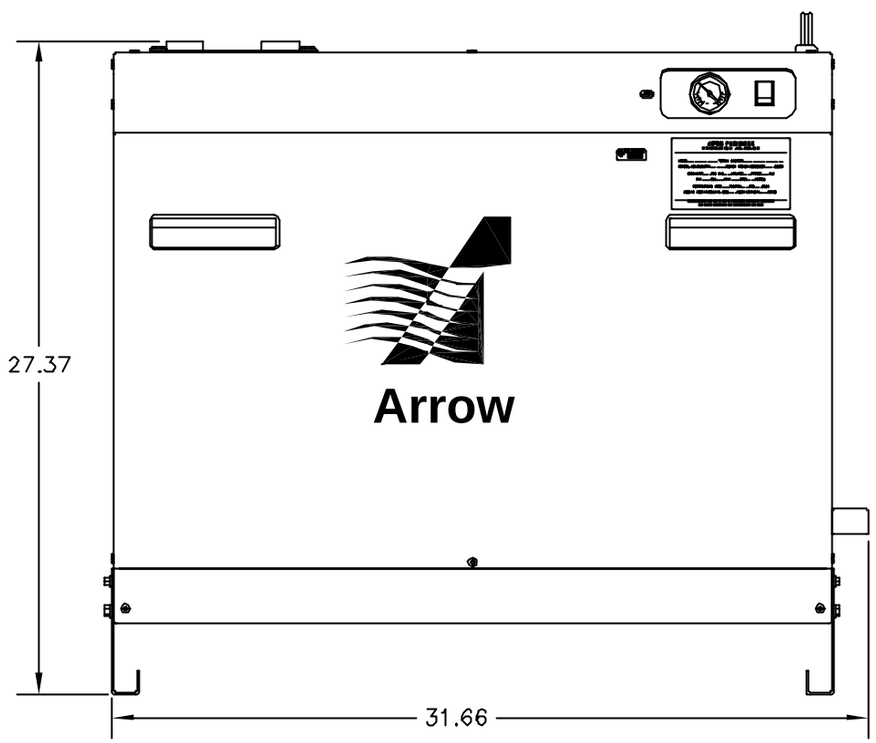

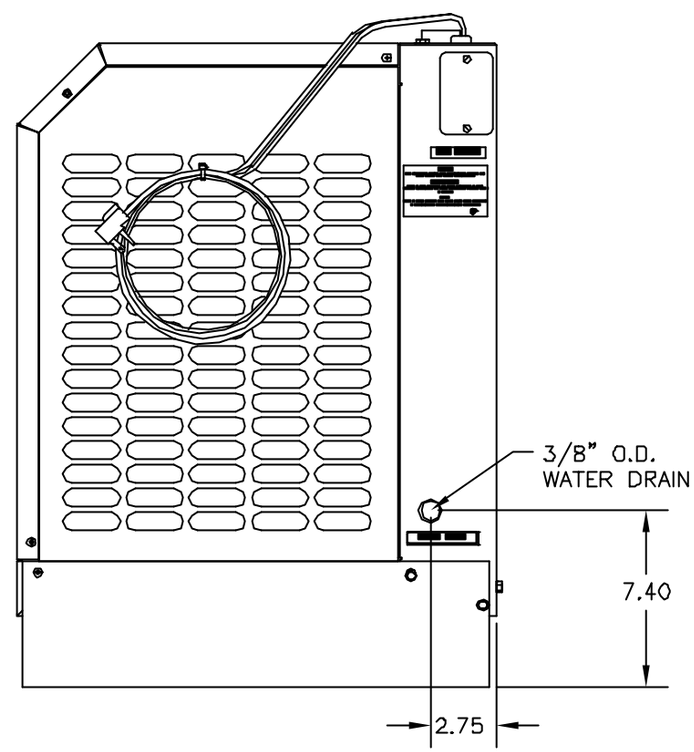

REV	ECN	DATE	DESCRIPTION	APPROVED

REVISIONS

STANDARD TOLERANCE UNLESS OTHERWISE SPECIFIED
.X = ± .030"
.XX = ± .020"
.XX = ± .005"
ANGULAR = ± 1°

REMOVE ALL BURRS
BREAK SHARP EDGES

DO NOT SCALE DRAWING

FINISH

TREATMENT

MATERIAL

DESCRIPTION: 125 SCFM AIR DRYER

DRAWN BY	DATE		SCALE	REV
R. ACOSTA	4/19/05	C	NTS	
CHEKED BY	DATE		PART NO. F-125-1	